TECHNICAL SHEETS

Fireplace inserts STEEL/FIRECLAY

PRODUCER :

KOBOK, spol. s r.o.

Strojárenská 318/46, 976 43 Piesok, Slovak republic

☎/🖷: 00421 48 / 617 1887, 617 2453, e-mail: kobok@ps.kobok.sk

www.kobok.sk

Branch stores :

BA – ZÁHORSKÁ BYSTRICA, Bratislavská 1 ☎: 02 / 6446 26 32, 🖷: 02 / 6436 97 27
NITRIANSKÉ PRAVNO, Dlhá 418 ☎/🖷: 046 / 5447 202
KOŠICE, Rampová 3 ☎: 055 / 7996 359, 🖷: 055 / 7996 360

Content:

Fireplace insert	Page
CHOPOK	3 – 11
CHOPOK R 90	12 – 17
CHOPOK 2 R 90	18 – 23
CHOPOK R 90 S	24 – 28
CHOPOK O	29 – 33
CHOPOK O 90	35 - 40
CHOPOK/ĎUMBIER R135 O	41 – 44
CHOPOK/ĎUMBIER O	45 – 48
CHOPOK/MÝTO 0	49 – 50
ĎUMBIER	51 – 54
ĎUMBIER R 135	55 – 58
ĎUMBIER O	59 – 62
ĎUMBIER R 135 O	63 – 66
MÝTO	67 – 72
BYSTRÁ	73 – 80
FIXED ACCESSORIES	81 – 85
FREE ACCESSORIES	86 – 87
UPDATINGS	88

Issued in September 2007

Technical Sheet

CHOPOK 550/440,500,560

Range 550

- Basic Model: **CHOPOK 550/440,500,560**
- Convection Casing (DP):*CHOPOK 550/440,500,560-DP*

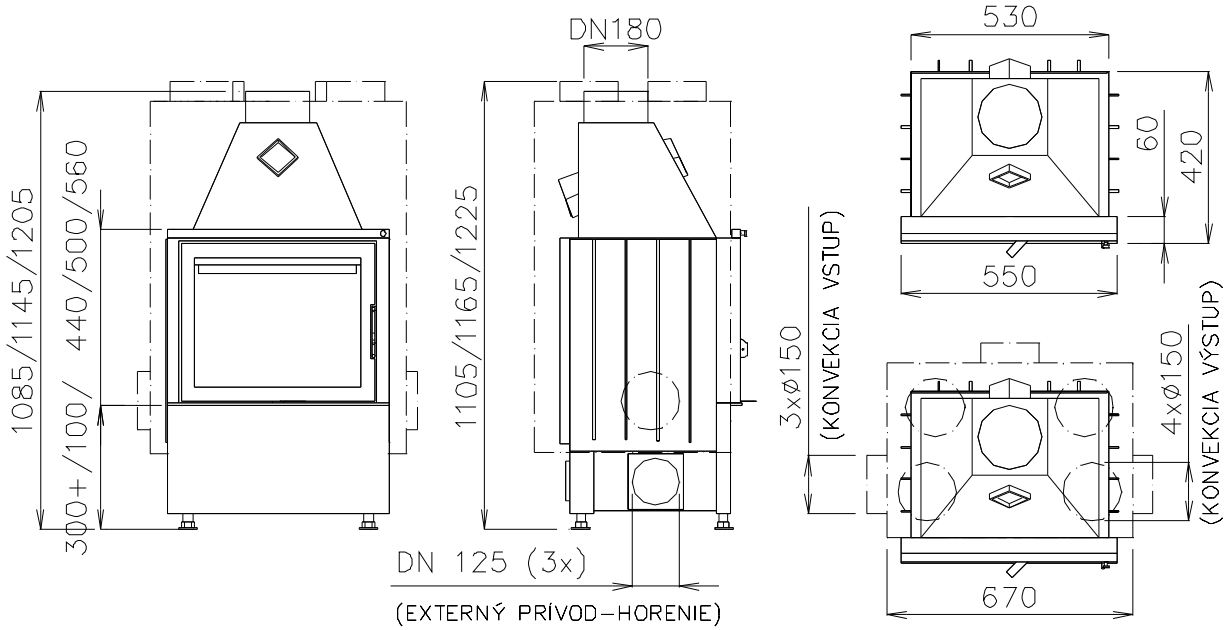

- Vertical Opening Door (VD): *CHOPOK VD 620/420,480,540*

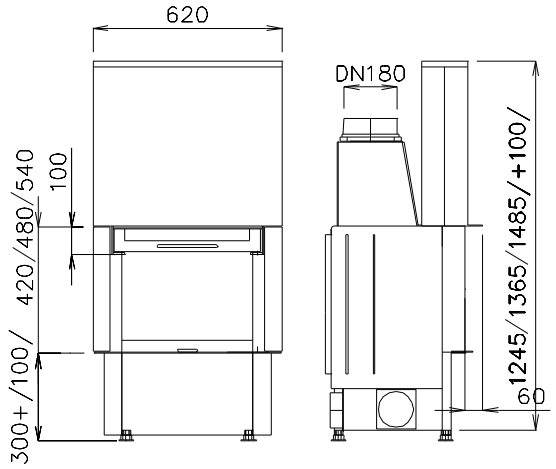

- Technical Data:

Type:	CHOPOK 550/440,500,560
Average heat output:	8 kW
Operating heat power:	2-10 kW
Flue gas mass flow:	12g/s
Flue gas temperature:	240 °C
Emission of CO to 13 % O2:	0,12%
Pressure required:	12 Pa
Weight: CH 550/440/500/56	140/145/155 kg
CH VD 620/420/480/540	170/175/185 kg

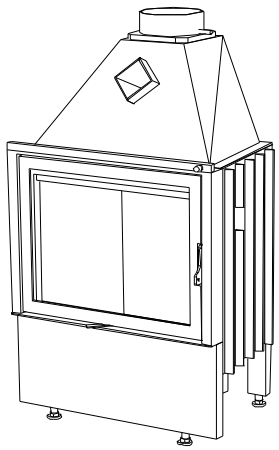

Technical Sheet

CHOPOK 600/440,500,560

Range 600

- Basic Model: **CHOPOK 600/440,500,560**
- Convection Casing (DP):*CHOPOK 600/440,500,560-DP*

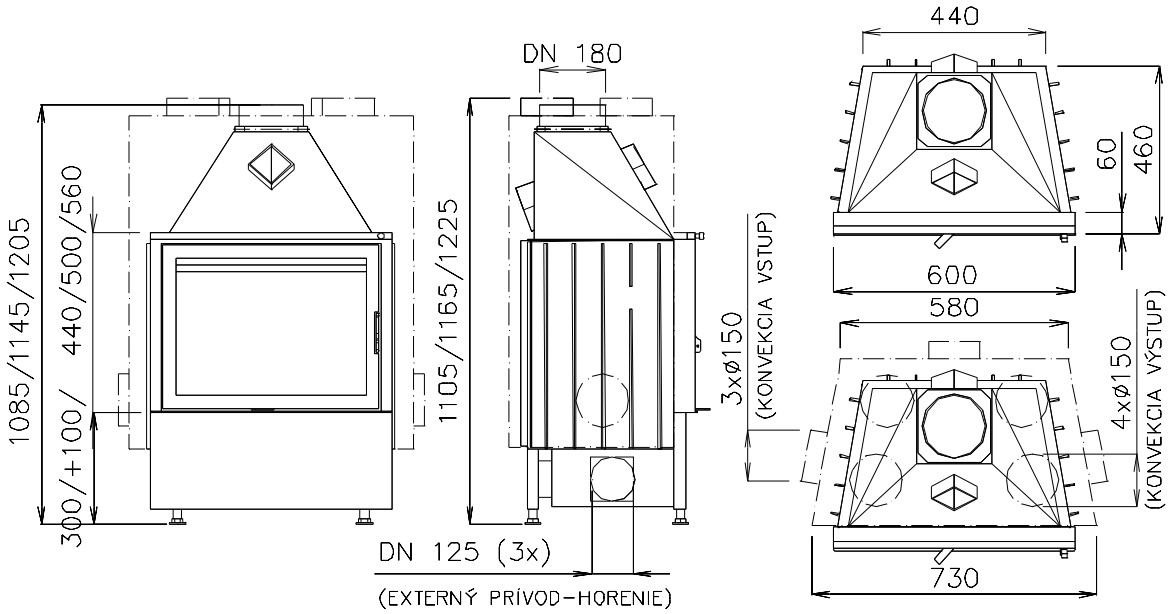

- Vertical Opening Door (VD): *CHOPOK VD 670/420,480,540*

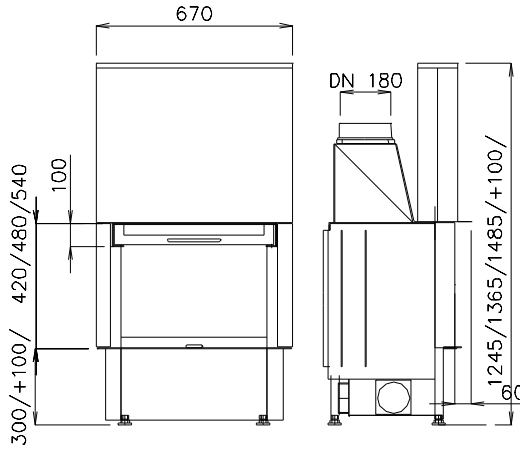

- Technical Data:

Type:	CHOPOK 600/440,500,560
Average heat output:	8,5 kW
Operating heat power:	2,5-10,5 kW
Flue gas mass flow:	15 g/s
Flue gas temperature:	250 °C
Emission of CO to 13 % O2:	0,12%
Pressure required:	12 Pa
Weight: CH 550/440/500/560	155/160/170 kg
CH VD 670/420/480/54	185/190/200 kg

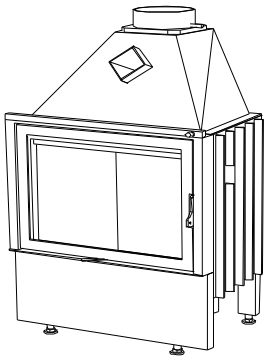

Technical Sheet

CHOPOK 670/440,500,560

Range 670

- Basic Model: **CHOPOK 670/440,500,560**
- Convection Casing (DP):*CHOPOK 670/440,500,560-DP*

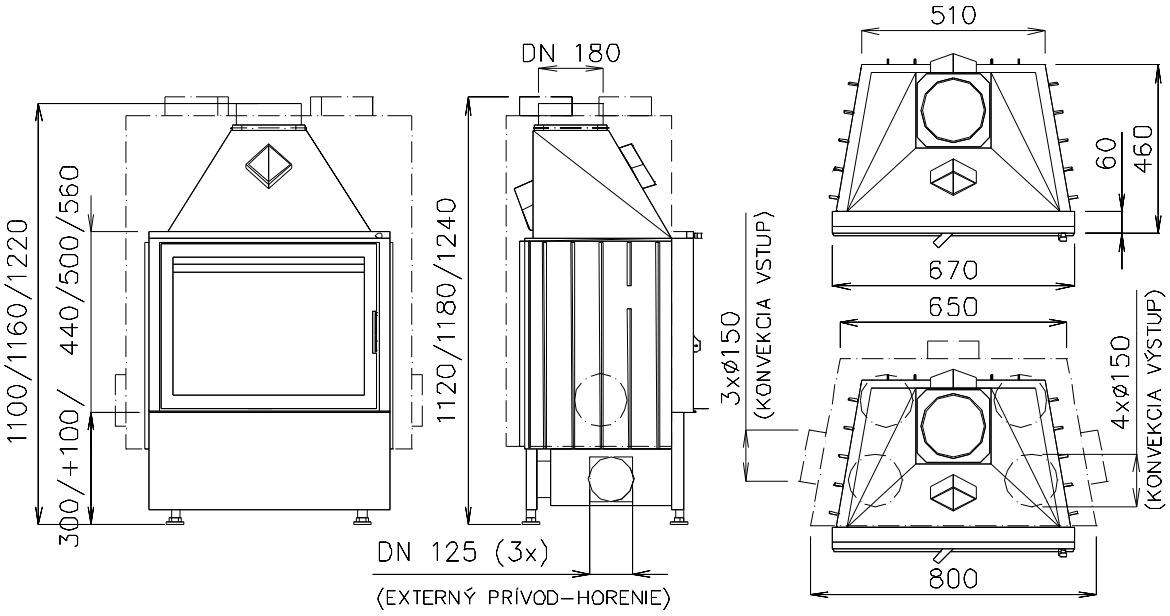

- Vertical Opening Door (VD): *CHOPOK VD 740/420,480,540*

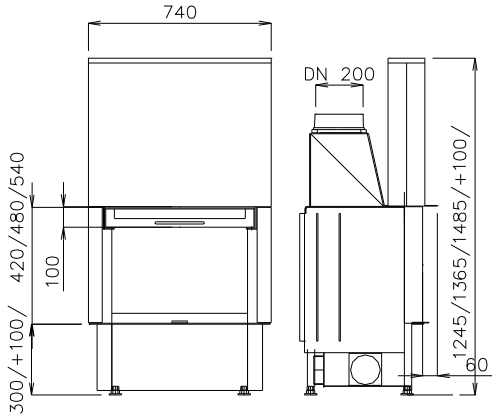

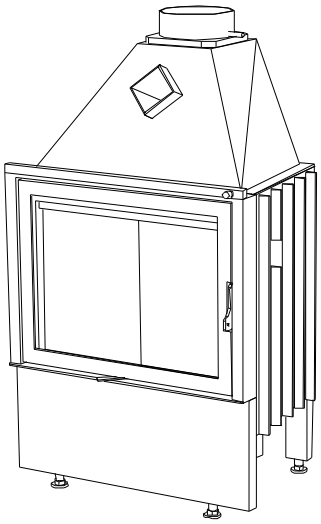

- Technical Data:

Type:	CHOPOK 670/440,500,560	
Average heat output:		9 kW
Operating heat power:		3-11 kW
Flue gas mass flow:		20 g/s
Flue gas temperature:		280 °C
Emission of CO to 13 % O2:		0,10%
Pressure required:		12 Pa
Weight:	CH 670/440/500/560	170/180/190 kg
	CH VD 740/420/480/540	200/210/220 kg

CHOPOK 780/500,560

- Basic Model: **CHOPOK 780/500,560**
- Convection Casing (DP):*CHOPOK 780/500,560-DP*

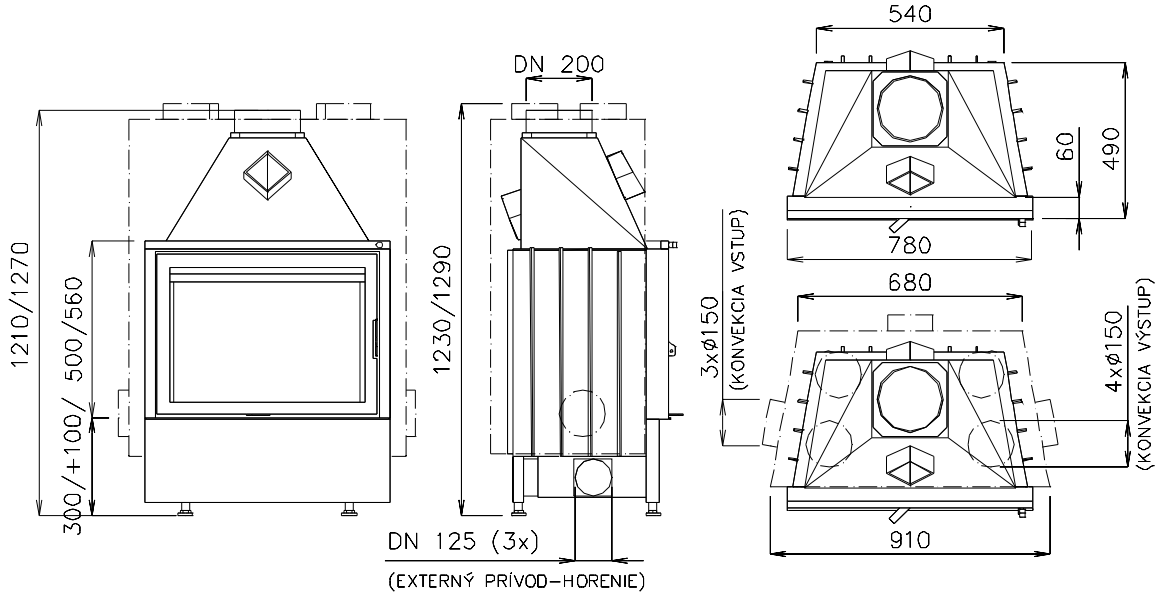

- Vertical Opening Door (VD): *CHOPOK VD 850/480,540*

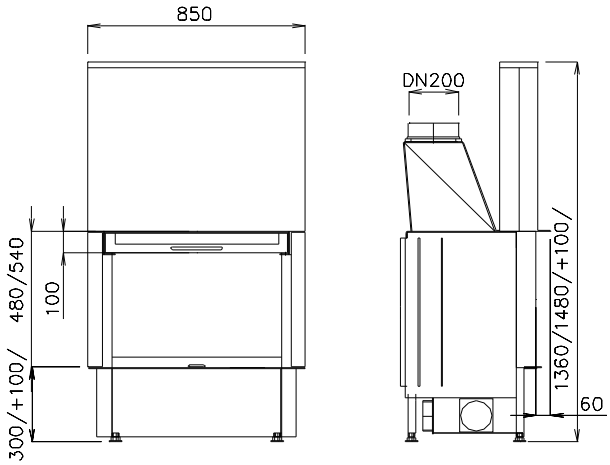

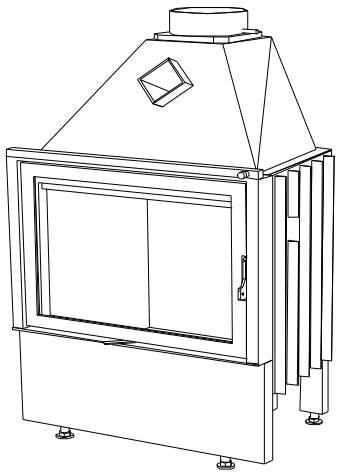

- Technical Data:

Type:	CHOPOK 780/500,560	
Average heat output:		10 kW
Operating heat power:		3-12,5 kW
Flue gas mass flow:		20 g/s
Flue gas temperature:		320 °C
Emission of CO to 13 % O2:		0,10%
Pressure required:		12 Pa
Weight:	CH 780/500/56	195/210 kg
	CH VD 850/480/540	240/255 kg

Technical Sheet

CHOPOK 900/500,560

Range 900

- Basic Model: **CHOPOK 900/500,560**
- Convection Casing (DP):*CHOPOK 900/500,560-DP*

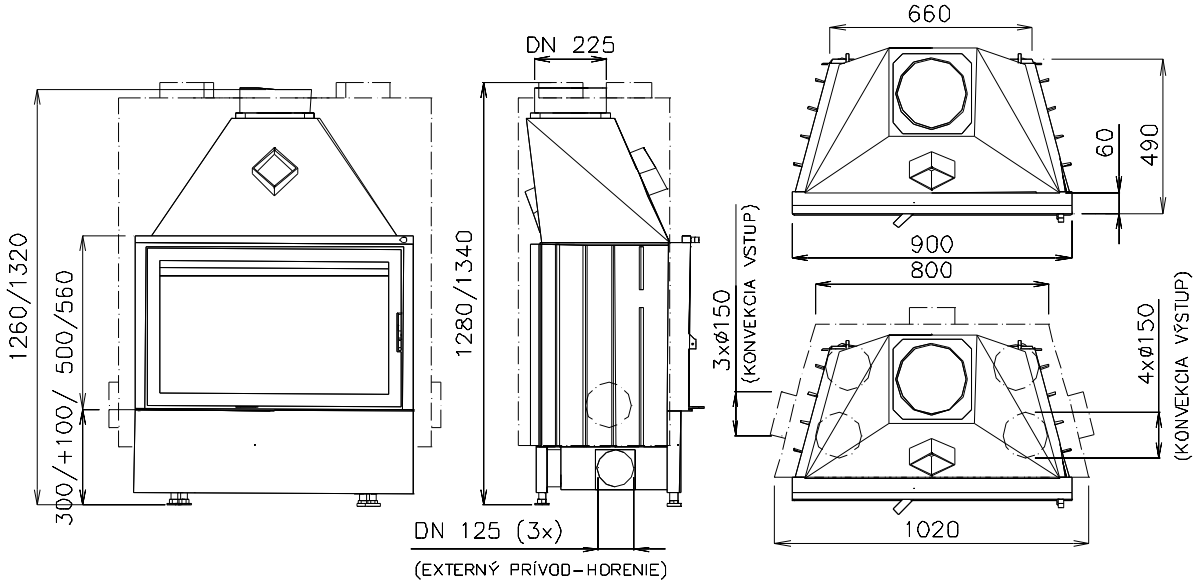

- Vertical Opening Door (VD): *CHOPOK VD 970/480,540*

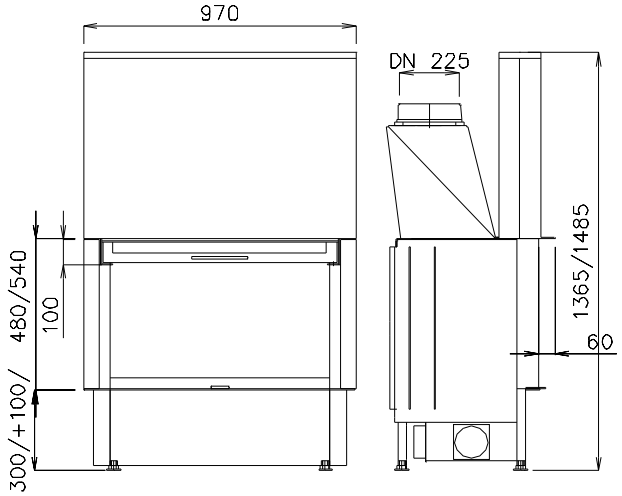

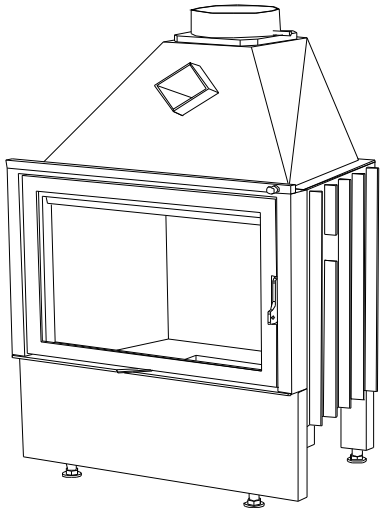

- Technical Data:

Type:	CHOPOK 900/500,560
Average heat output:	11 kW
Operating heat power:	3,5-14 kW
Flue gas mass flow:	18 g/s
Flue gas temperature:	300°C
Emission of CO to 13 % O2:	0,15%
Pressure required:	12 Pa
Weight: CH 900/500/560	230/245 kg
CH VD 970/480/540	280/295 kg

Technical Sheet

CHOPOK 1000/500,560

Range 1000

- Basic Model: **CHOPOK 1000/500,560**
- Convection Casing (DP):*CHOPOK 1000/500,560-DP*

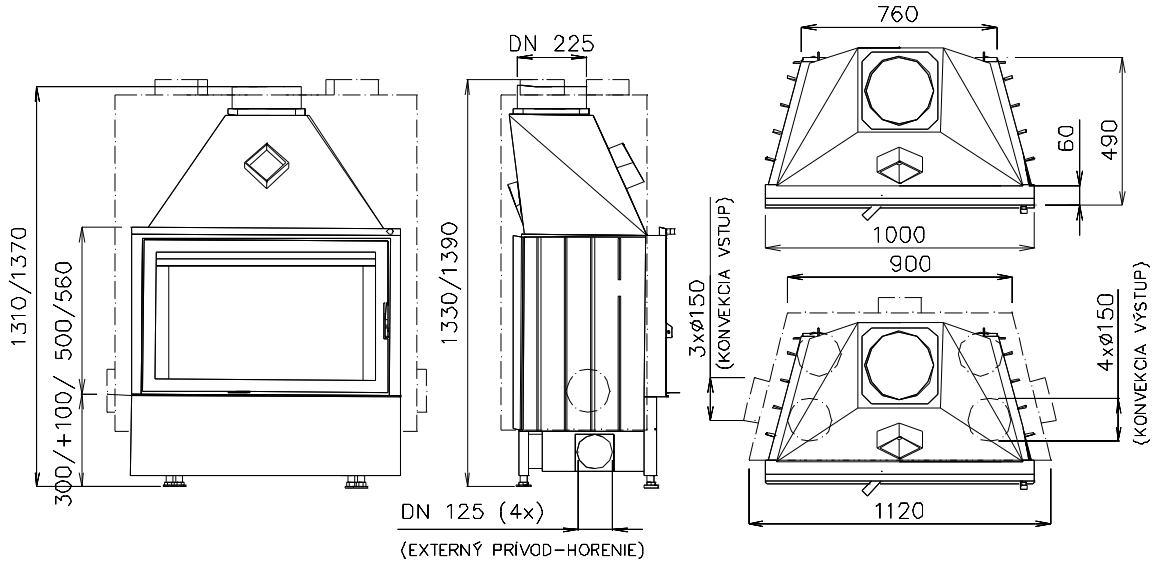

- Vertical Opening Door (VD): *CHOPOK VD 1070/480,540*

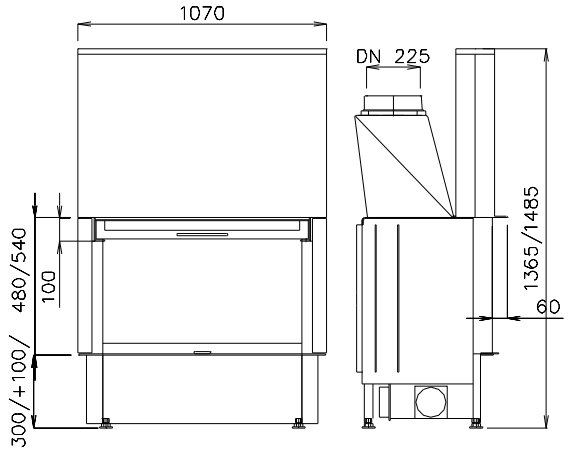

- Technical Data:

Type:	CHOPOK 1000/500,560	
Average heat output:		12
Operating heat power:		4-15 kW
Flue gas mass flow:		18g/s
Flue gas temperature:		300 ^{o}C
Emission of CO to 13 % O2:		0,20%
Pressure required:		12 Pa
Weight:	CH 1000/500/560	250/270 kg
	CH VD 1070/480/540	300/320 kg

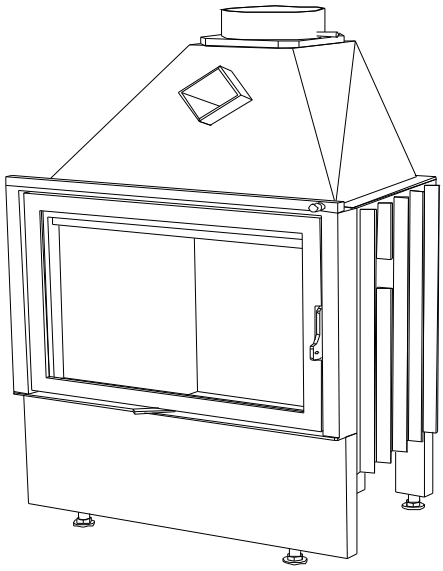

● Basic Model - Vertical Opening Door: **CHOPOK VD 1170/480,540**

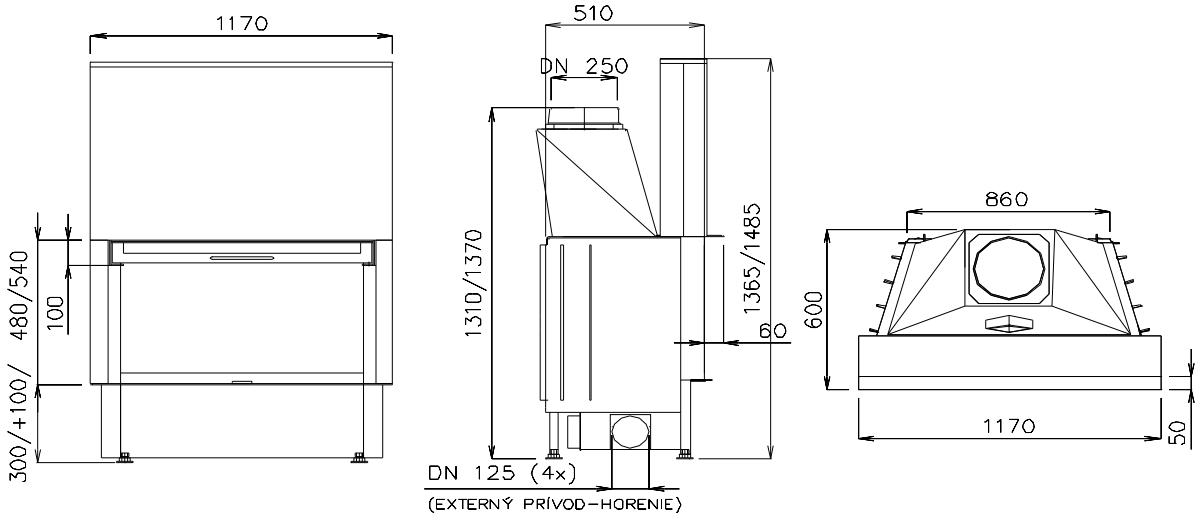

●Convection Casing (DP): *CHOPOK VD1170/480,540-DP*

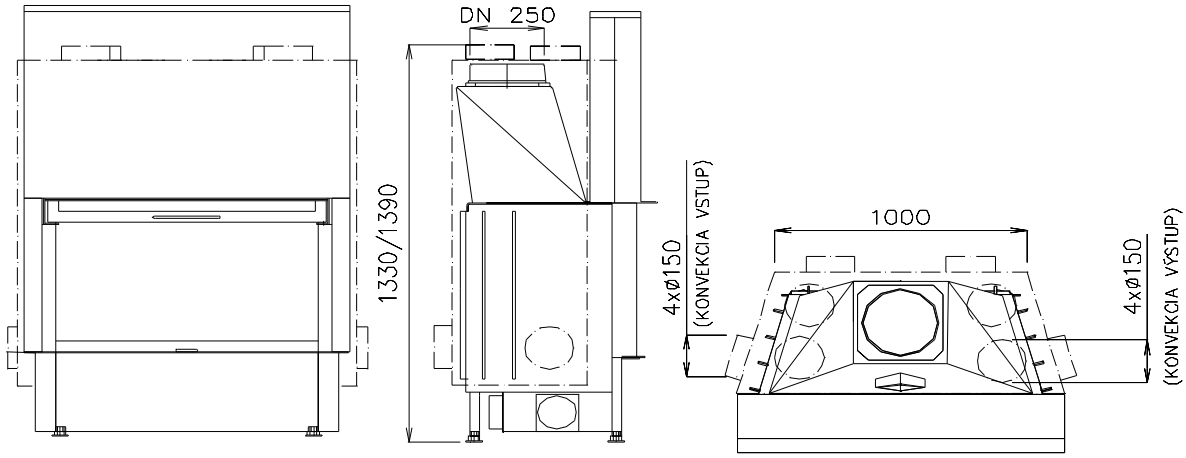

● Technical Data:

Type:	CHOPOK 1100/500,560
Average heat output:	13
Operating heat power:	4-16 kW
Flue gas mass flow:	16 g/s
Flue gas temperature:	260 °C
Emission of CO to 13 % O2:	0,25%
Pressure required:	12 Pa
Weight: CH VD 1170/480/540	310/340 kg

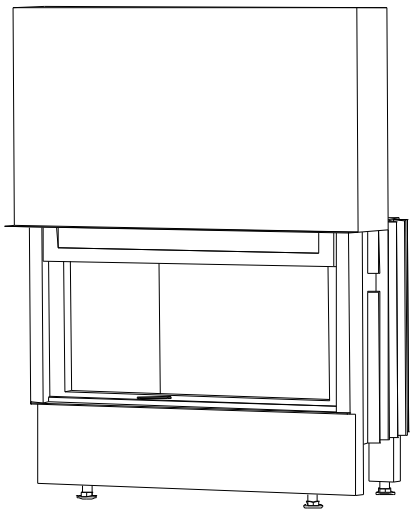

- Basic Model - Vertical Opening Door: **CHOPOK VD 1270/480,540**

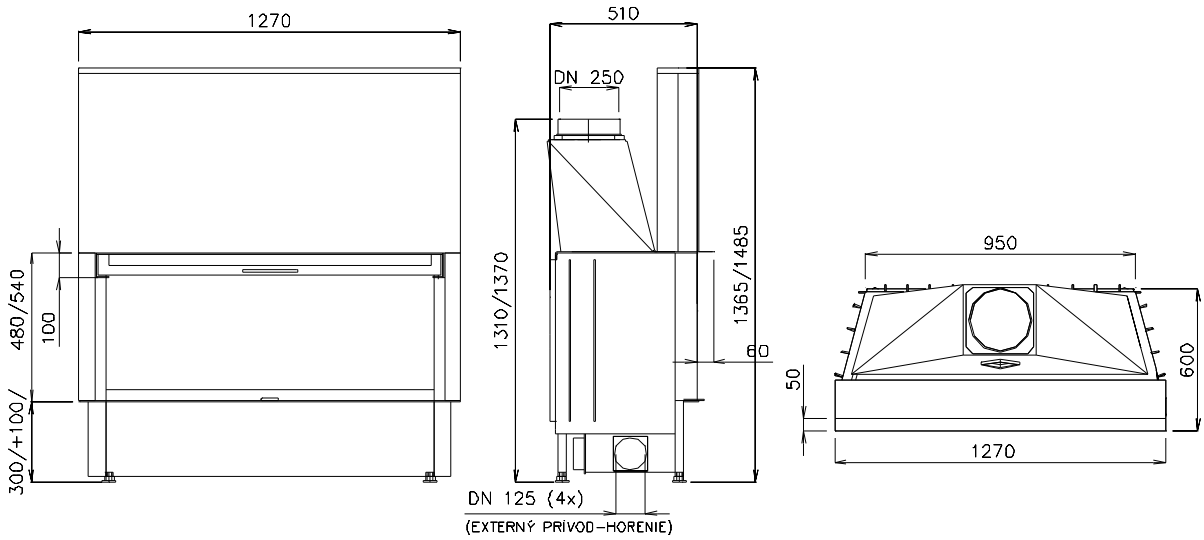

- Convection Casing (DP): *CHOPOK VD 1270/480,540-DP*

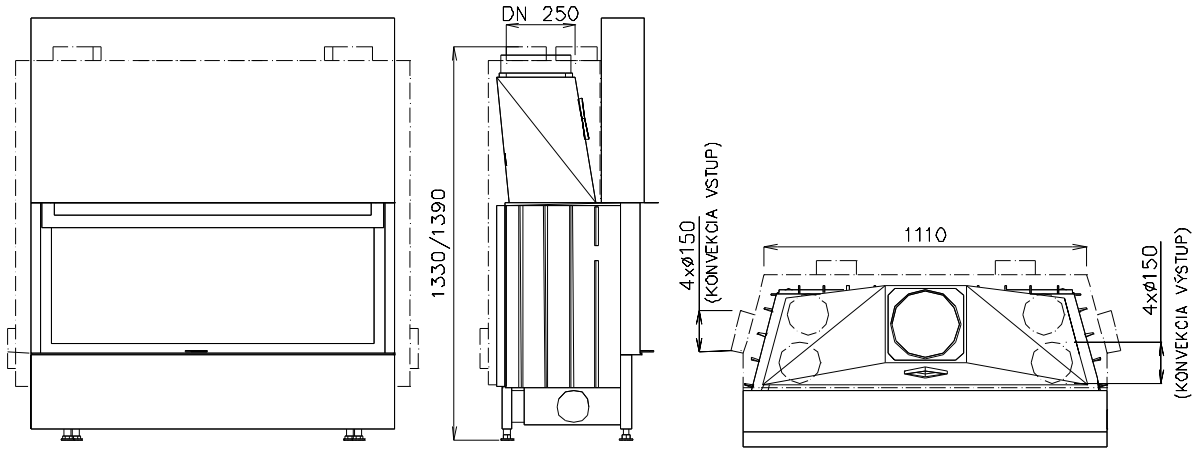

- Technical Data:

Type:	CHOPOK 1200/500,560
Average heat output:	13
Operating heat power:	4-16 kW
Flue gas mass flow:	16 g/s
Flue gas temperature:	250 °C
Emission of CO to 13 % O2:	0,30%
Pressure required:	12 Pa
Weight: CH VD 1270/480/540	340/380 kg

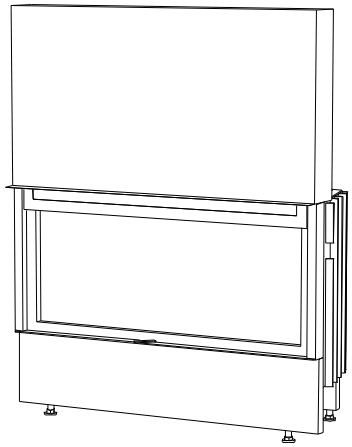

- Basic Model - Vertical Opening Door (VD): **CHOPOK VD 1370/480,540**

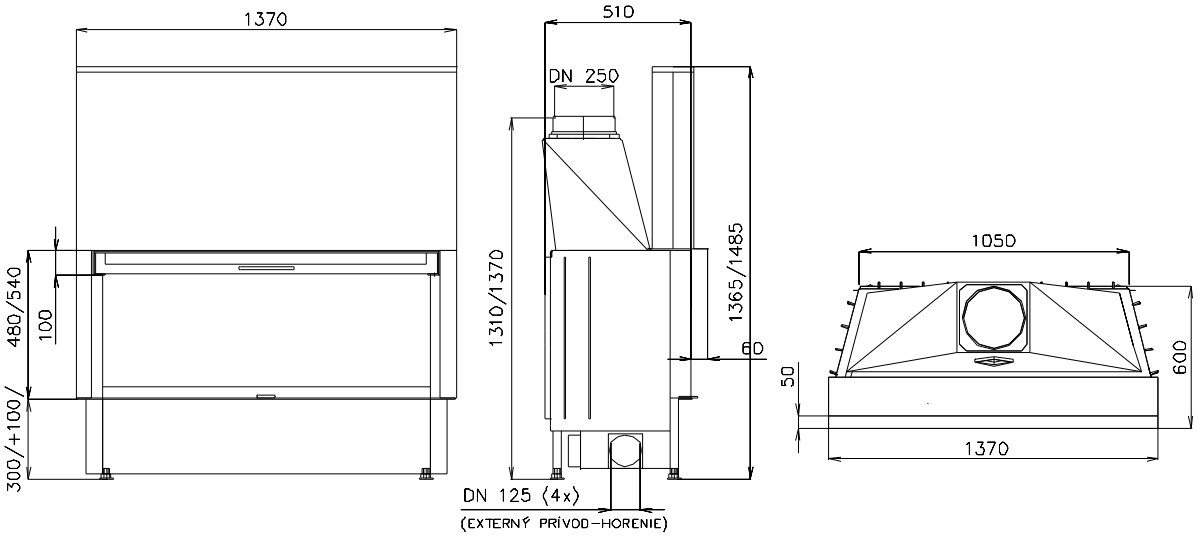

- Convection Casing (DP): *CHOPOK VD 1300/500,560-DP*

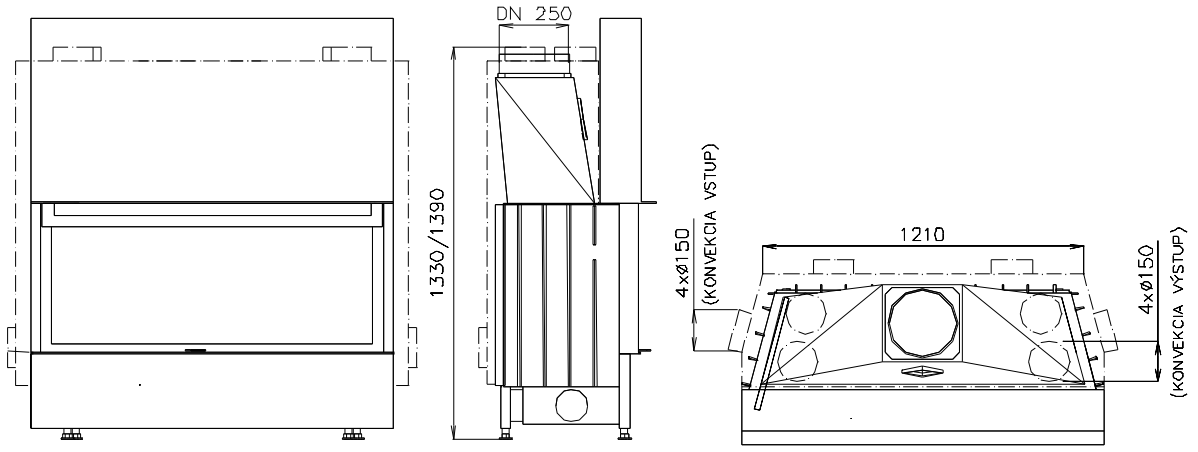

- Technical Data:

Type:	CHOPOK 1300/500,560
Average heat output:	13
Operating heat power:	4-16 kW
Flue gas mass flow:	15 g/s
Flue gas temperature:	250 °C
Emission of CO to 13 % O2:	0,35%
Pressure required:	12 Pa
Weight: CH VD 1370/480/540	360/410 kg

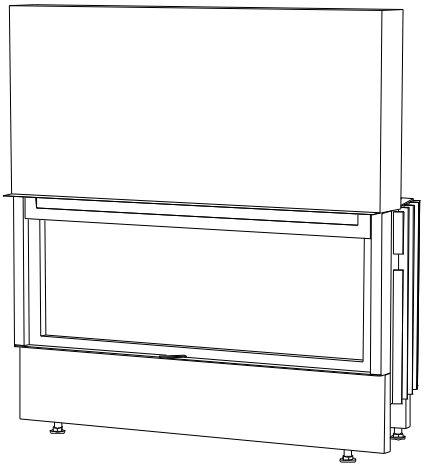

Technical Sheet

CHOPOK R 90/330 L/P 550/440,500,560 Range 550

CHOPOK R 90/450 L/P 550/440,500,560 .

- Basic Model: **CHOPOK R 90/330 L/P 550/440,500,560**
  CHOPOK R 90/450 L/P 550/440,500,560
- Convection Casing (DP): *CHOPOK R 90/330 L/P 550/440,500,560-DP*
  CHOPOK R 90/450 L/P 550/440,500,560-DP

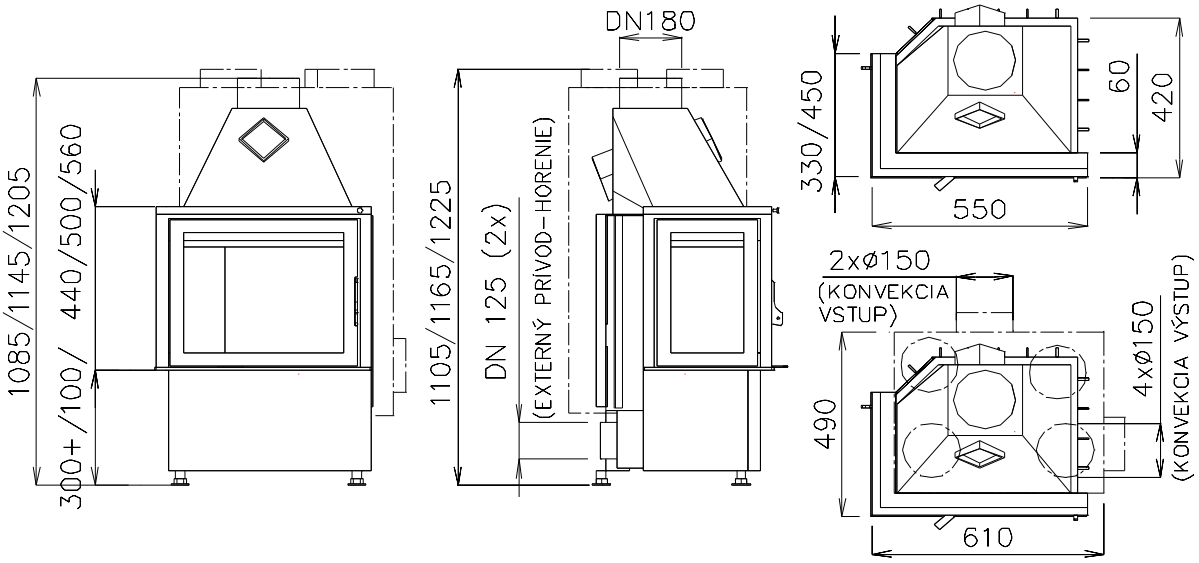

- Vertical Opening Door (VD): *CHOPOK VD R 90/380 L/P 600/420,480,540*
  CHOPOK VD R 90/500 L/P 600/420,480,540

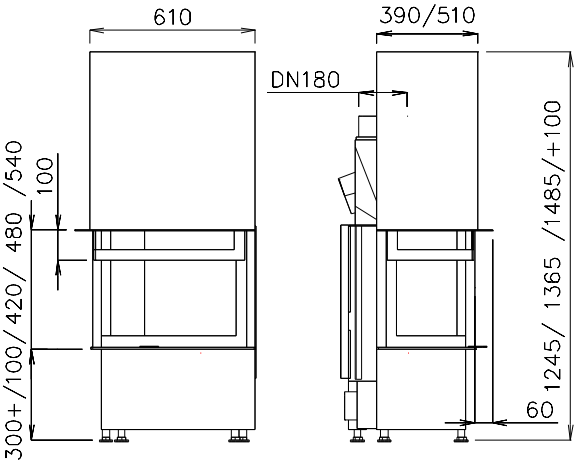

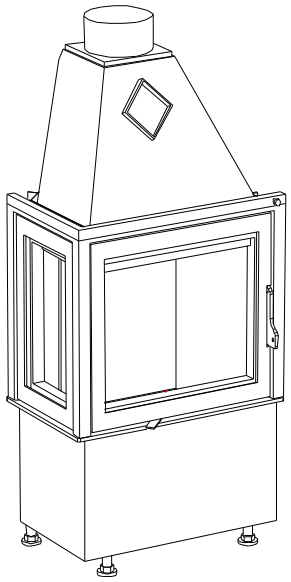

- Technical Data:

Type:CHOPOK R 90/330 L/P 550/440,500,560
Type:CHOPOK R 90/450 L/P 550/440,500,560
Average heat output: 8 kW

Operating heat power:	2-10 kW
Flue gas mass flow:	12 g/s
Flue gas temperature:	240 °C
Emission of CO to 13 % O2:	0,12%
Pressure required:	12 Pa
Weight: CHOPOK R 90/330 L/P 550/440,500,560	140/145/150
CHOPOK VD R 90/380 L/P 600/420,480,540	170/175/180
CHOPOK R 90/450 L/P 550/440,500,560	135/140/145
CHOPOK VD R 90/500 L/P 600/420,480,540	165/170/175

Technical Sheet

CHOPOK R 90/330 L/P 600/440,500,560
CHOPOK R 90/450 L/P 600/440,500,560

Range 600

- Basic Model: **CHOPOK R 90/330 L/P 600/440,500,560**
  CHOPOK R 90/450 L/P 600/440,500,560
- Convection Casing (DP): *CHOPOK R 90/330 L/P 600/440,500,560-DP*
  CHOPOK R 90/450 L/P 600/440,500,560-DP

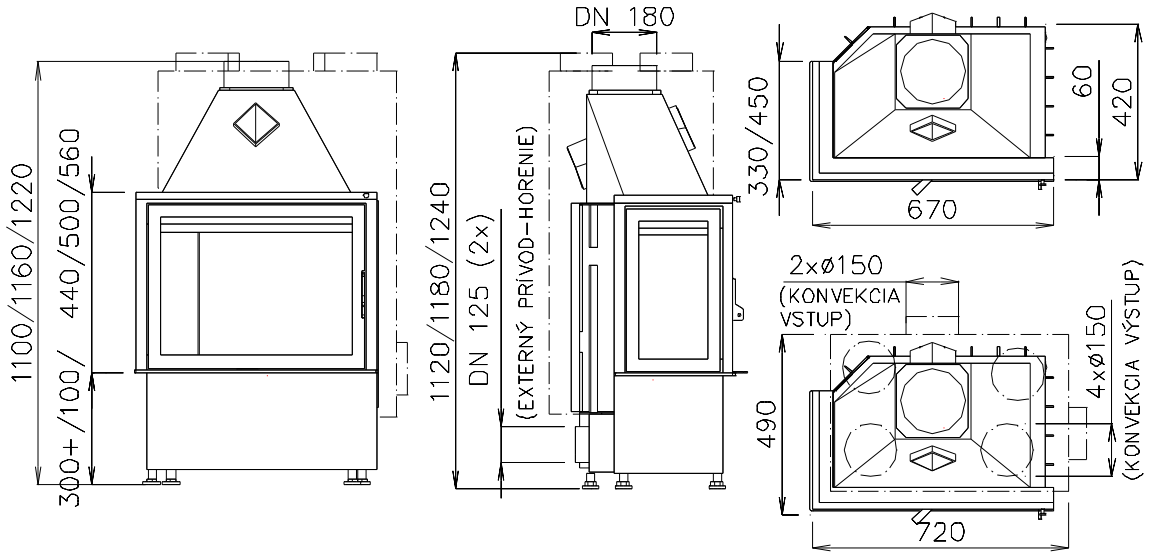

- Vertical Opening Door (VD): *CHOPOK VD R 90/380 L/P 650/420,480,540*
  CHOPOK VD R 90/500 L/P 650/420,480,540

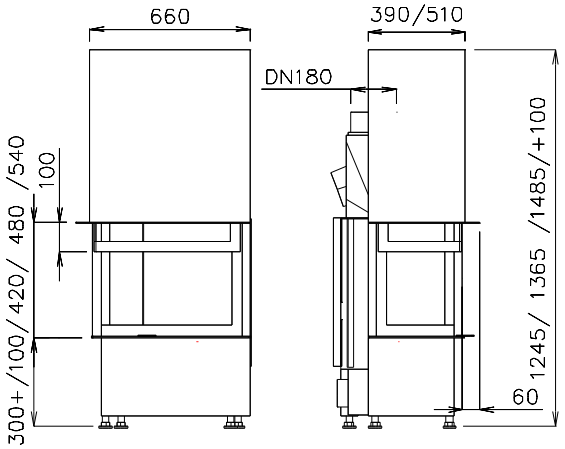

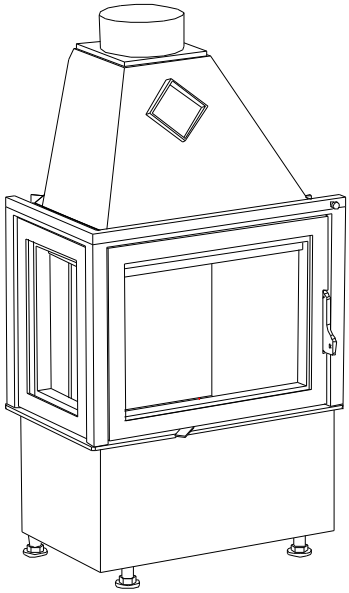

- Technical Data:

Type: CHOPOK R 90/330 L/P 600/440,500,560
Type: CHOPOK R 90/450 L/P 600/440,500,560

Average heat output:	8,5 kW
Operating heat power:	2,5-10,5 kW
Flue gas mass flow:	15 g/s
Flue gas temperature:	250 °C
Emission of CO to 13 % O2:	0,12%
Pressure required:	12 Pa
Weight: CHOPOK R 90/330 L/P 600/440,500,560	155/160/165
CHOPOK VD R 90/380 L/P 650/420,480,540	185/195/205
CHOPOK R 90/450 L/P 600/440,500,560	150/155/160
CHOPOK VD R 90/500 L/P 650/420,480,540	180/190/200

Technical Sheet

CHOPOK R 90/330 L/P 670/440,500,560 Range 670

CHOPOK R 90/450 L/P 670/440,500,560 .

- Basic Model: **CHOPOK R 90/330 L/P 670/440,500,560**
  CHOPOK R 90/450 L/P 670/440,500,560
- Convection Casing (DP):*CHOPOK R 90/330 L/P 670/440,500,560-DP*
  CHOPOK R 90/450 L/P 670/440,500,560-DP

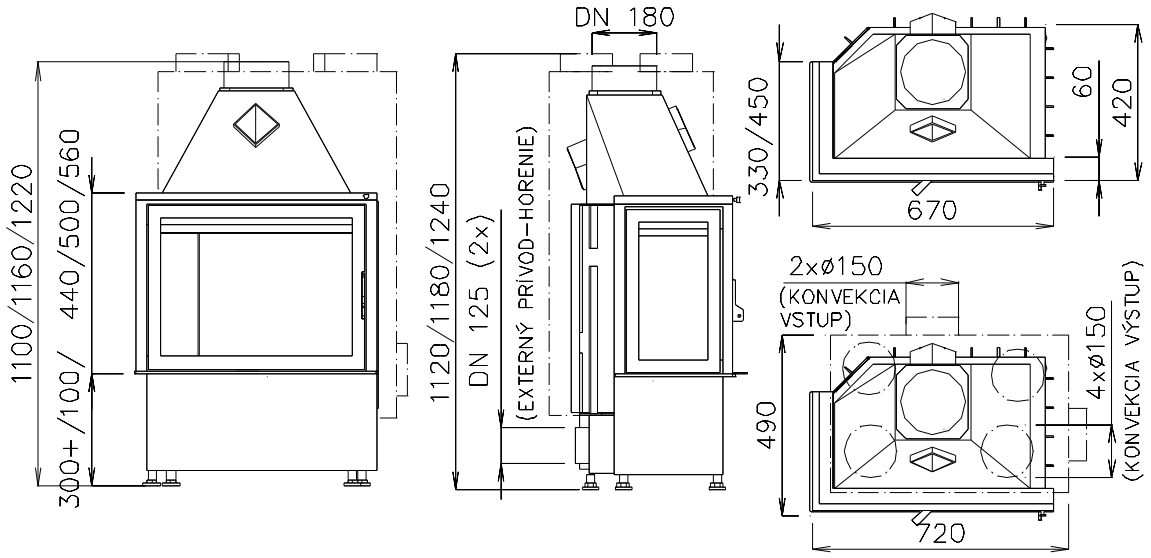

- Vertical Opening Door (VD): *CHOPOK VD R 90/380 L/P 720/420,480,540*
  CHOPOK VD R 90/500 L/P 720/420,480,540

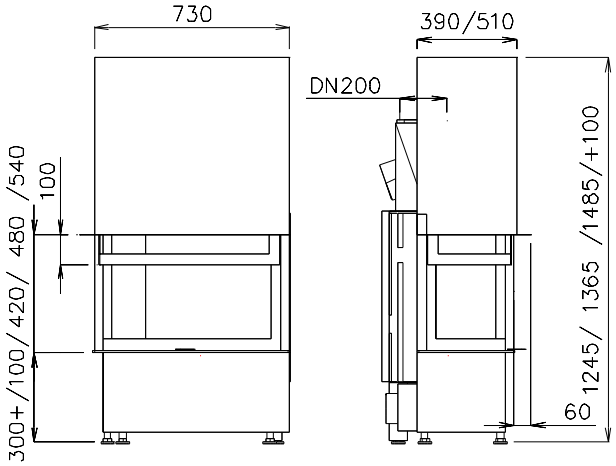

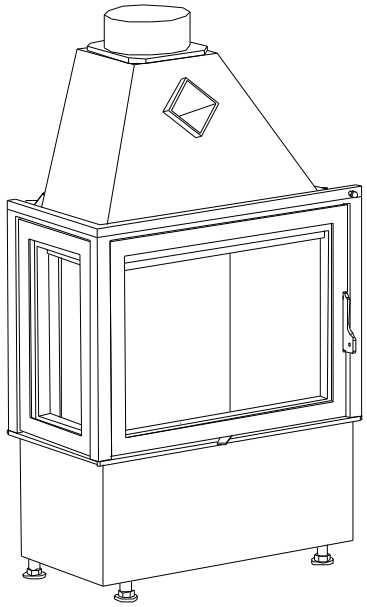

- Technical Data:

Type:CHOPOK R 90/330 L/P 670/440,500,560
Type:CHOPOK R 90/450 L/P 670/440,500,560

Average heat output:	9 kW
Operating heat power:	3-11 kW
Flue gas mass flow:	20 g/s
Flue gas temperature:	280 °C
Emission of CO to 13 % O2:	0,10%
Pressure required:	12 Pa
Weight:CHOPOK R 90/330 L/P 670/440,500,56	155/170/185
CHOPOK VD R 90/380 L/P 720/420,480,540	205/215/225
CHOPOK R 90/450 L/P 670/440,500,560	150/165/180
CHOPOK VD R 90/500 L/P 720/420,480,540	200/210/220

Technical Sheet

CHOPOK R 90/330 L/P 780/500,560 Range 780

CHOPOK R 90/450 L/P 780/500,560 .

- Basic Model: **CHOPOK R 90/330 L/P 780/500,560**
  CHOPOK R 90/450 L/P 780/500,560
- Convection Casing (DP):*CHOPOK R 90/330 L/P 780/500,560-DP*
  CHOPOK R 90/450 L/P 780/500,560-DP

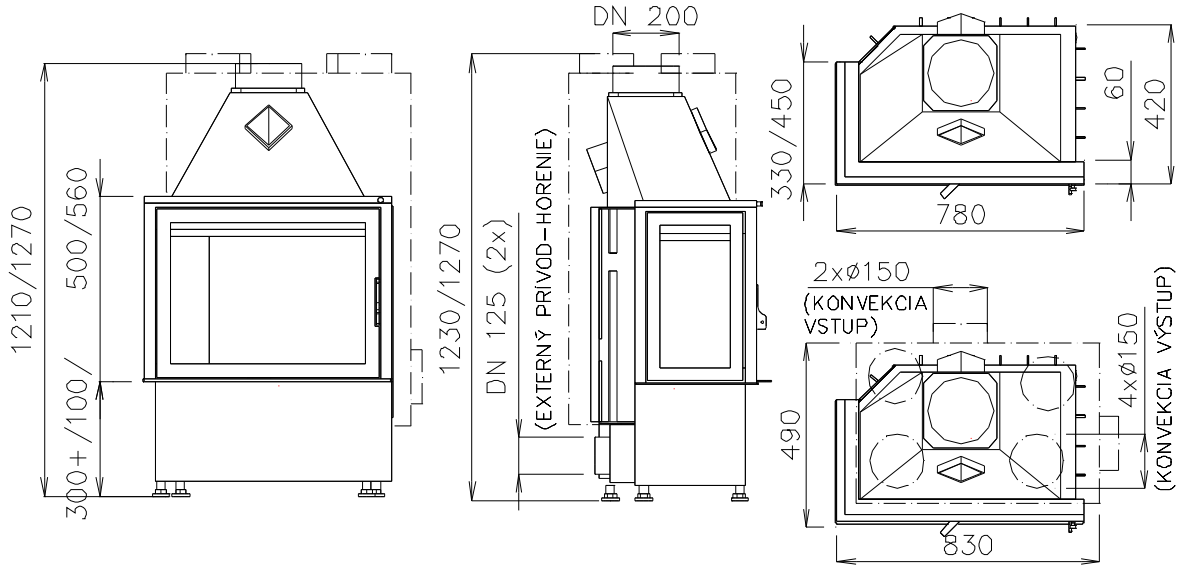

- Vertical Opening Door (VD): *CHOPOK VD R 90/380 L/P 830/480,540*
  CHOPOK VD R 90/500 L/P 830/480,540

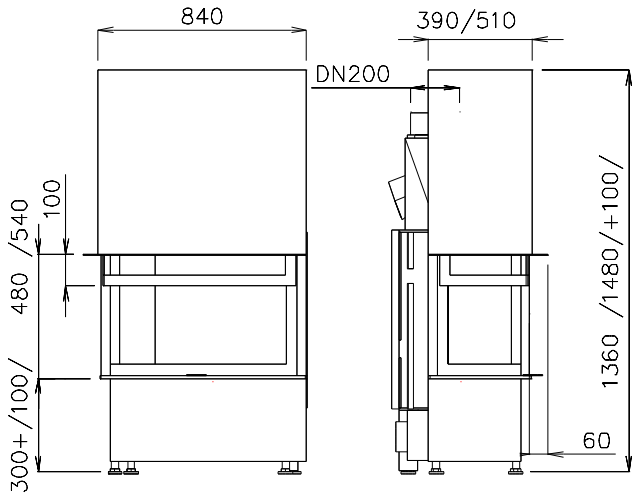

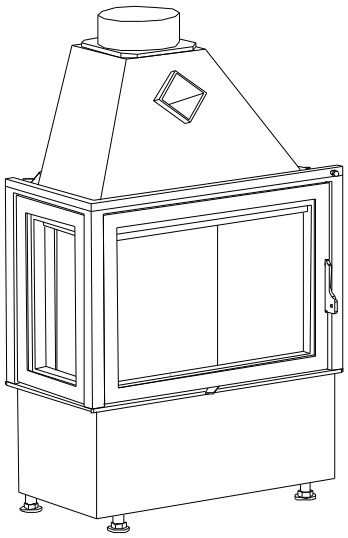

- Technical Data:

Type:CHOPOK R 90/330 L/P 780/500,560
Type:CHOPOK R 90/450 L/P 780/500,560
Average heat output: 10 Kw

Operating heat power:	3-12,5 kW
Flue gas mass flow:	20 g/s
Flue gas temperature:	320 °C
Emission of CO to 13 % O2:	0,10%
Pressure required:	12 Pa
Weight:CHOPOK R 90/330 L/P 780/500,560	195/210
CHOPOK VD R 90/380 L/P 830/480,540	215/250
CHOPOK R 90/450 L/P 780/500,560	190/20
CHOPOK VD R 90/500 L/P 830/480,540	210/24

Technical Sheet

CHOPOK R 90/330 L/P 900/500,560
CHOPOK R 90/450 L/P 900/500,560
CHOPOK R 90/500 L/P 900/500,560

Range 900

- Basic Model: **CHOPOK R 90/330 L/P 900/500,560**
  CHOPOK R 90/450 L/P 900/500,560
  CHOPOK R 90/500 L/P 900/500,560
- Convection Casing (DP):*CHOPOK R 90/330 L/P 900/500,560-DP*
  CHOPOK R 90/450 L/P 900/500,560-DP
  CHOPOK R 90/500 L/P 900/500,560-DP

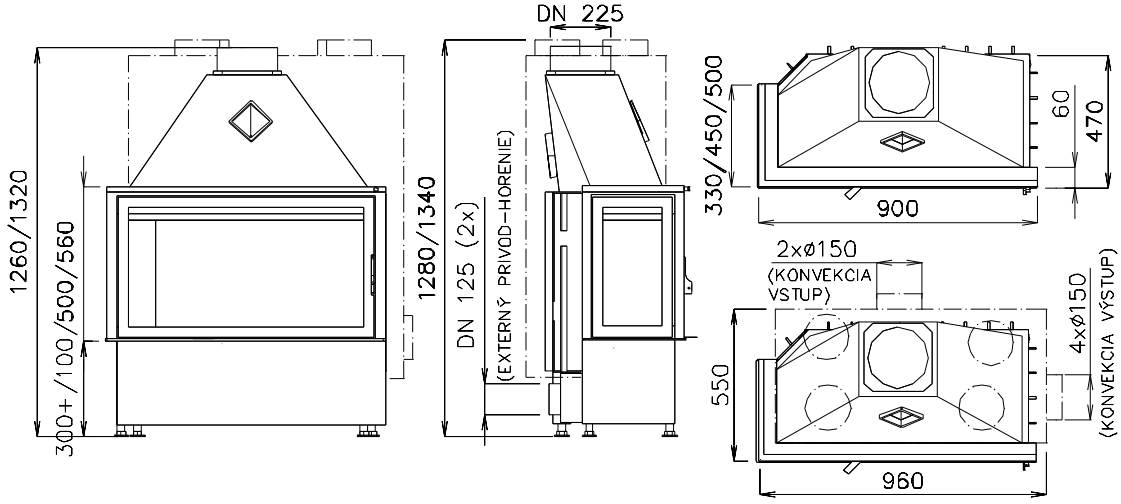

- Vertical Opening Door (VD)*: CHOPOK VD R 90/380 L/P 950/480,540*
  CHOPOK VD R 90/500 L/P 950/480,540
  CHOPOK VD R 90/550 L/P 950/480,540

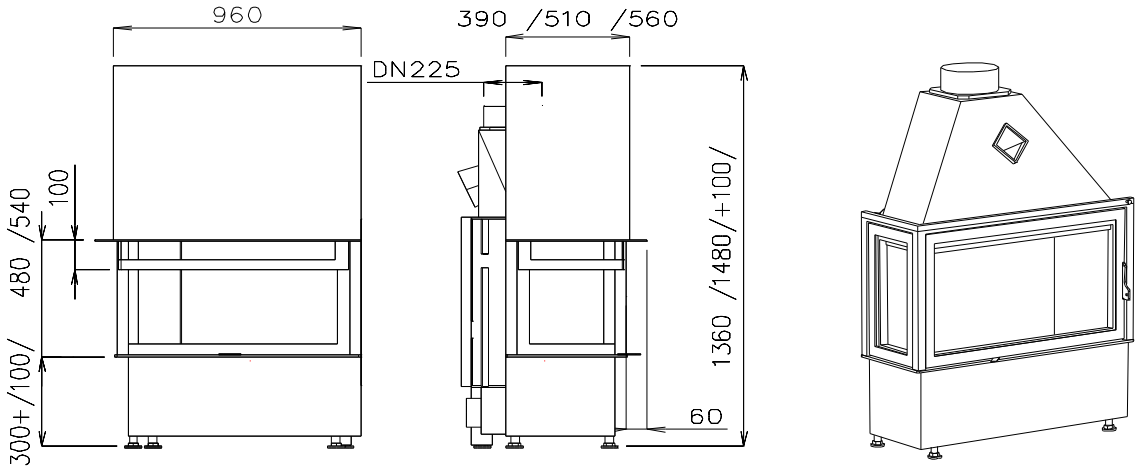

- Technical Data:

Type:CHOPOK R 90/330 L/P 900/500,560
Type:CHOPOK R 90/450 L/P 900/500,560
Type:CHOPOK R 90/500 L/P 900/500,560
Average heat output: 11 kW
Operating heat power: 3,5-14 kW
Flue gas mass flow: 18 g/s
Flue gas temperature: 300 °C
Emission of CO to 13 % O2: 0,15%

Pressure required: 12 Pa
Weight:

CHOPOK R 90/330 L/P 900/500,560	210/225
CHOPOK VD R 90/380 L/P950/500,560	270/285
CHOPOK R 90/450 L/P 900/500,560	205/220
CHOPOK VD R 90/500 L/P 950/500,560	265/280
CHOPOK R 90/500 L/P 900/500,560	200/215
CHOPOK VD R 90/550 L/P 950/500,560	260/275

Technical Sheet

CHOPOK R 90/330 L/P 1000/500,560
CHOPOK R 90/450 L/P 1000/500,560
CHOPOK R 90/500 L/P 1000/500,560

Range 1000

- Basic Model: **CHOPOK R 90/330 L/P 1000/500,560**
  CHOPOK R 90/450 L/P 1000/500,560
  CHOPOK R 90/500 L/P 1000/500,560
- Convection Casing (DP): *CHOPOK R 90/330 L/P 1000/500,560-DP*
  CHOPOK R 90/450 L/P 1000/500,560-DP
  CHOPOK R 90/500 L/P 1000/500,560-DP

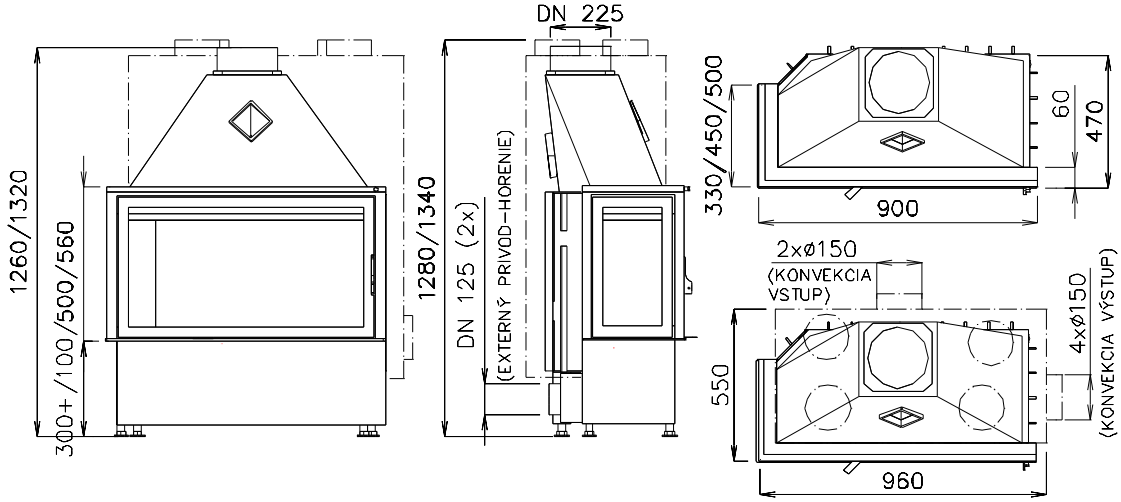

- Vertical Opening Door (VD): *CHOPOK VD R 90/380 L/P 1050/480,540*
  CHOPOK VD R 90/500 L/P 1050/480,540
  CHOPOK VD R 90/550 L/P 1050/480,540

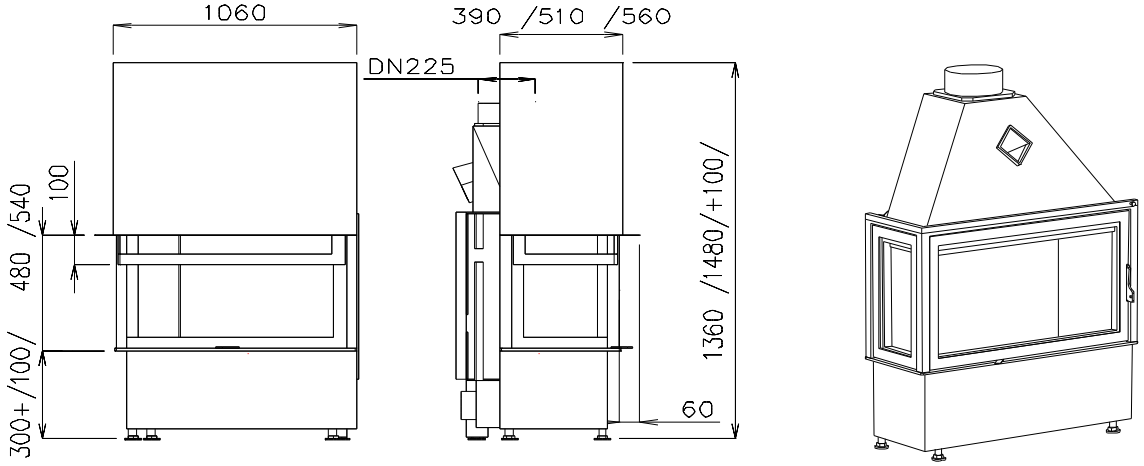

- Technical Data:

Type:CHOPOK R 90/330 L/P 1000/500,560
Type:CHOPOK R 90/450 L/P 1000/500,560
Type:CHOPOK R 90/500 L/P 1000/500,560
Average heat output: 12 kW
Operating heat power: 4-15 kW
Flue gas mass flow: 18 g/s
Flue gas temperature: 300 °C
Emission of CO to 13 % O2: 0,20%

Pressure required: 12 Pa
Weight:

CHOPOK R 90/330 L/P 1000/500,560	220/235
CHOPOK VD R 90/380 L/P1050/480,540	280/295
CHOPOK R 90/450 L/P 1000/500,560	225/240
CHOPOK VD R 90/500 L/P 1050/480,540	285/300
CHOPOK R 90/500 L/P 1000/500,560	230/245
CHOPOK VD R 90/550 L/P 1050/480,540	290/310

Technical Sheet

CHOPOK 2R 90/330 L/P 550/440,500,560 Range 550
CHOPOK 2R 90/450 L/P 550/440,500,560

- Basic Model: **CHOPOK 2R 90/330 L/P 550/440,500,560**
  CHOPOK 2R 90/450 L/P 550/440,500,560
- Convection Casing (DP):*CHOPOK 2R 90/330 L/P 550/440,500,560-DP*
  CHOPOK 2R 90/450 L/P 550/440,500,560-DP

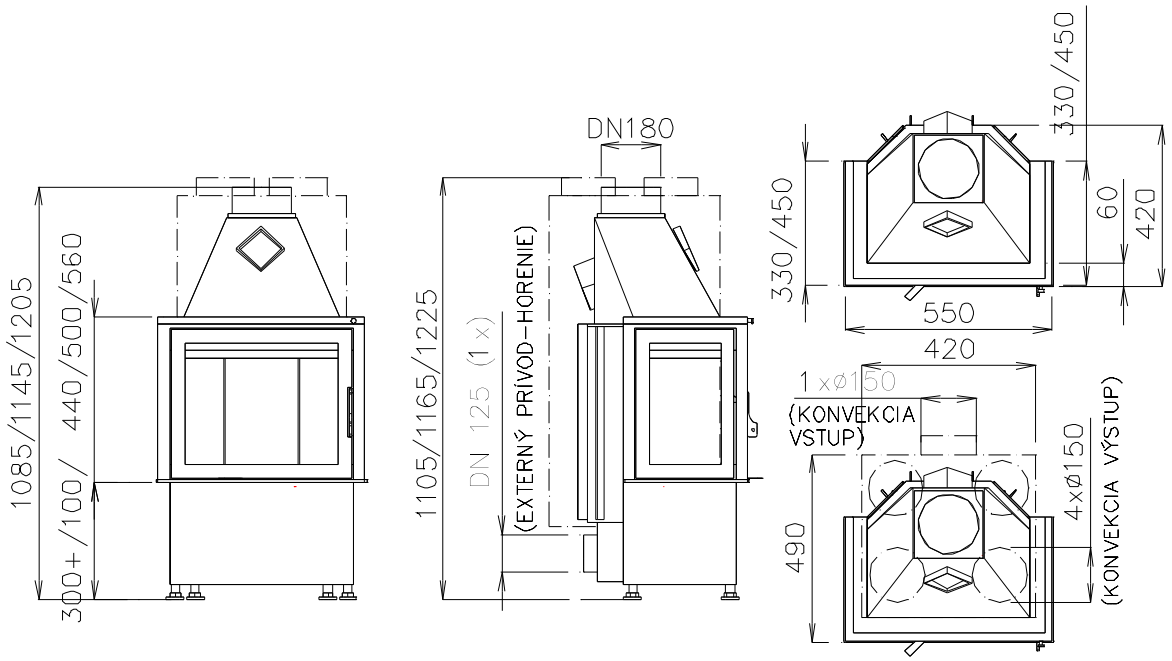

- Vertical Opening Door (VD): *CHOPOK VD2 R 90/380 L/P 590/420,480,540*
  CHOPOK VD 2R 90/500 L/P 590/420,480,540

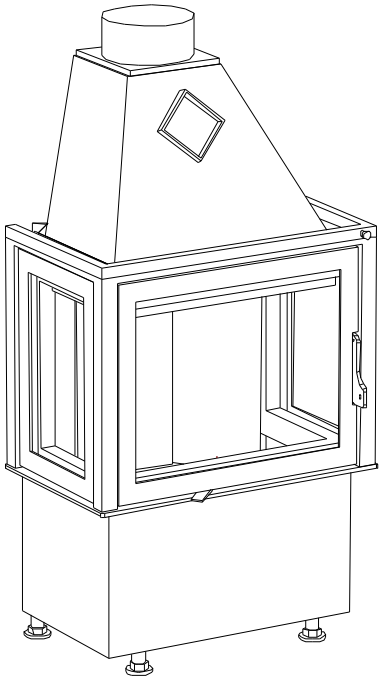

- Technical Data:

Type:CHOPOK 2R 90/330 L/P 550/440,500,560
Type:CHOPOK 2R 90/450 L/P 550/440,500,560

Average heat output:	8 kW
Operating heat power:	2-10 kW
Flue gas mass flow:	12 g/s
Flue gas temperature:	240°C
Emission of CO to 13 % O2:	0,12%
Pressure required:	12 Pa
Weight:CHOPOK 2R 90/330 L/P 550/440,500,560	125/130/135
CHOPOK 2R 90/450 L/P 550/440,500,560	120/125/130

Technical Sheet

CHOPOK 2R 90/330 L/P 600/440,500,560 Range 600
CHOPOK 2R 90/450 L/P 600/440,500,560 .

- Basic Model: **CHOPOK 2R 90/330 L/P 600/440,500,560**
  CHOPOK 2R 90/450 L/P 600/440,500,560
- Convection Casing (DP):*CHOPOK 2R 90/330 L/P 600/440,500,560-DP*
  CHOPOK 2R 90/450 L/P 600/440,500,560-DP

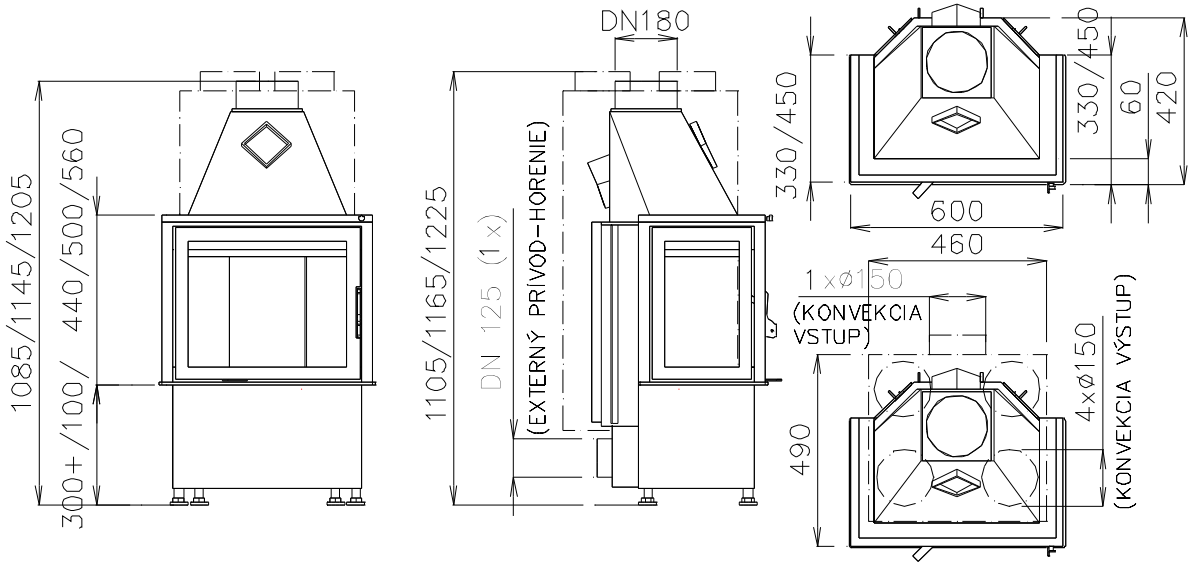

- Vertical Opening Door (VD): *CHOPOK VD2R 90/380 L/P 640/420,480,540*
  CHOPOK VD 2R 90/500 L/P 640/420,480,540

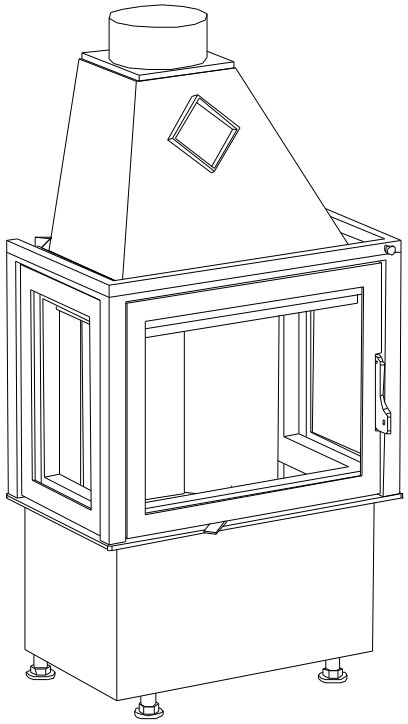

- Technical Data:

Type:CHOPOK 2R 90/330 L/P 600/440,500,560
Type:CHOPOK 2R 90/450 L/P 600/440,500,560
Average heat output: 8,5 kW

Operating heat power:	2,5-10,5 kW
Flue gas mass flow:	15 g/s
Flue gas temperature:	250 ^{o}C
Emission of CO to 13 % O2:	0,12%
Pressure required:	12 Pa
Weight:CHOPOK 2R 90/330 L/P 600/440,500,560	140/145/150
CHOPOK 2R 90/450 L/P 600/440,500,560	130/135/140

Technical Sheet

CHOPOK 2R 90/330 L/P 670/440,500,560 Range 670
CHOPOK 2R 90/450 L/P 670/440,500,560 .

- Basic Model: **CHOPOK 2R 90/330 L/P 670/440,500,560**
  CHOPOK 2R 90/450 L/P 670/440,500,560
- Convection Casing (DP):*CHOPOK 2R 90/330 L/P 670/440,500,560-DP*
  CHOPOK 2R 90/450 L/P 670/440,500,560-DP

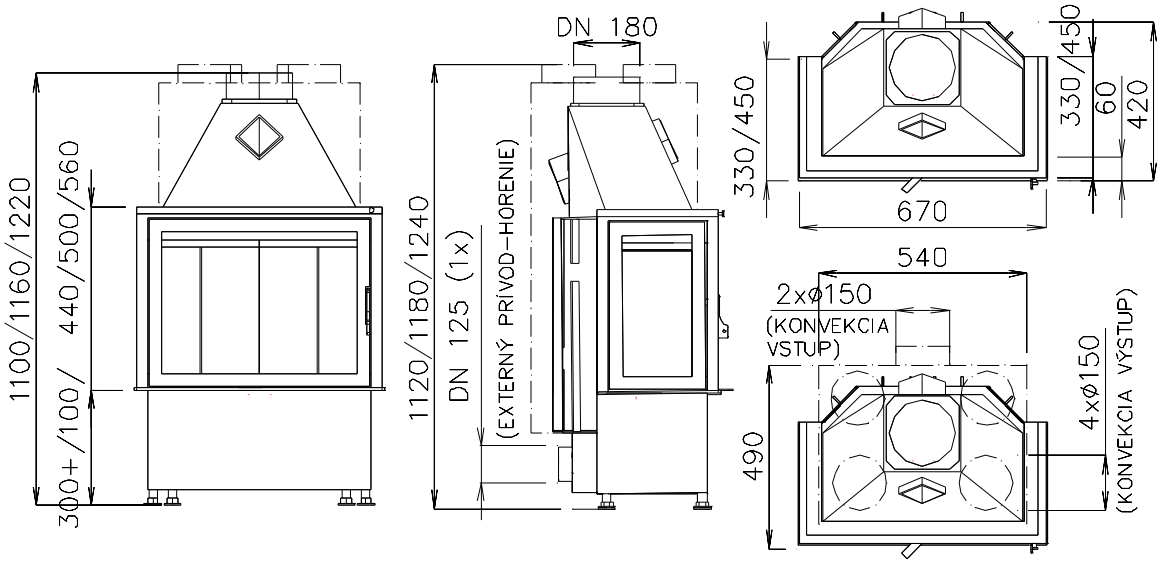

- Vertical Opening Door (VD): *CHOPOK VD 2R 90/380 L/P 710/420,480,540*
  CHOPOK VD 2R 90/500 L/P 710/420,480,540

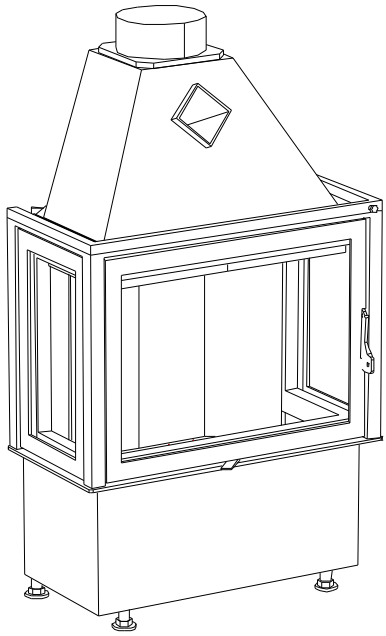

- Technical Data:

Type:CHOPOK 2R 90/330 L/P 670/440,500,560
Type:CHOPOK 2R 90/450 L/P 670/440,500,560
Average heat output: 9 kW

Operating heat power:	3-11 kW
Flue gas mass flow:	20 g/s
Flue gas temperature:	28 ^{o}C
Emission of CO to 13 % O2:	0,10%
Pressure required:	12 Pa
Weight:CHOPOK 2R 90/330 L/P 670/440,500,560	155/160/165
CHOPOK 2R 90/450 L/P 670/440,500,560	150/155/160

Technical Sheet

CHOPOK 2R 90/330 L/P 780/500,560 Range 780
CHOPOK 2R 90/450 L/P 780/500,560 .

- Basic Model: **CHOPOK 2R 90/330 L/P 780/500,560**
  CHOPOK 2R 90/450 L/P 780/500,560
- Convection Casing (DP):*CHOPOK 2R 90/330 L/P 780/500,560-DP*
  CHOPOK 2R 90/450 L/P 780/500,560-DP

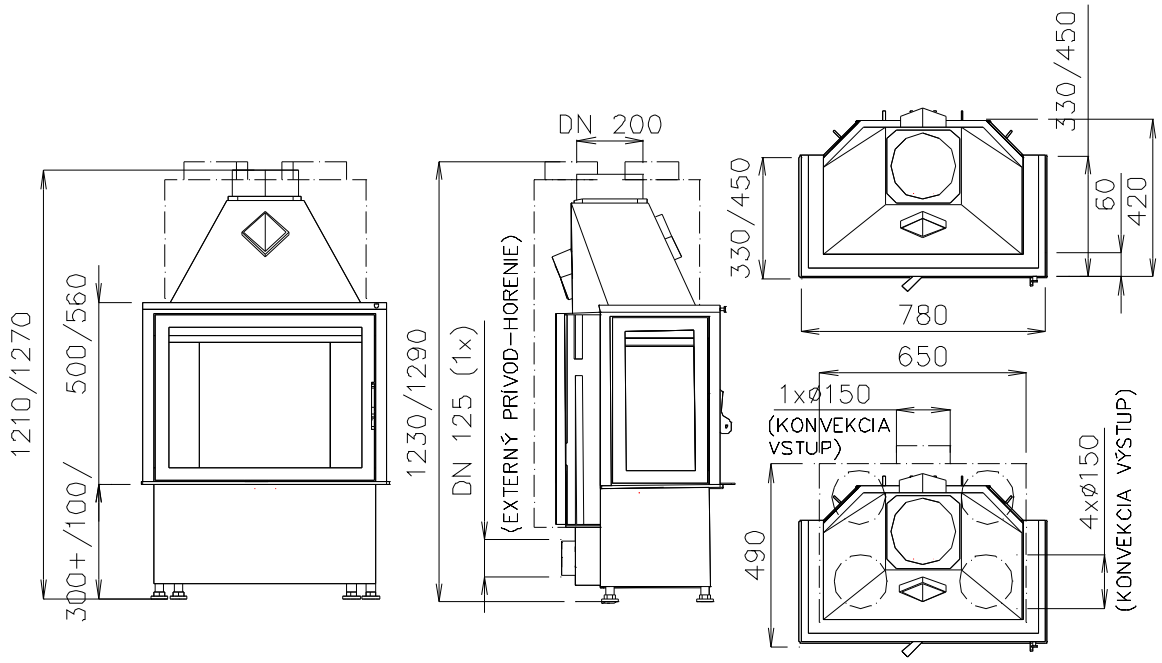

- Vertical Opening Door (VD): *CHOPOK VD 2R 90/380 L/P 820/480,540*
  CHOPOK VD 2R 90/500 L/P 820/480,540

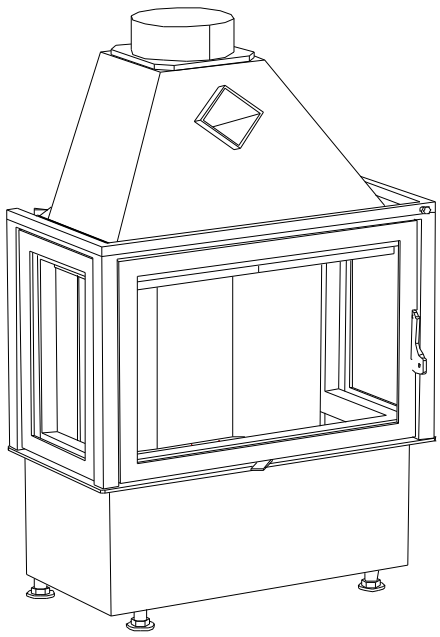

- Technical Data:

Type:CHOPOK 2R 90/330 L/P 780/500,560
Type:CHOPOK 2R 90/450 L/P 780/500,560

Average heat output:	10 kW
Operating heat power:	3-12,5 kW
Flue gas mass flow:	20 g/s
Flue gas temperature:	320 ^{o}C
Emission of CO to 13 % O2:	0,10%
Pressure required:	12 Pa
Weight:CHOPOK 2R 90/330 L/P 780/500,560	170/190
CHOPOK 2R 90/450 L/P 780/500,560	165/185

Technical Sheet

CHOPOK 2R 90/330 L/P 900/500,560 Range 900
CHOPOK 2R 90/450 L/P 900/500,560
CHOPOK 2R 90/500 L/P 900/500,560 .

- Basic Model: **CHOPOK 2R 90/330 L/P 900/500,560**
  CHOPOK 2R 90/450 L/P 900/500,560
  CHOPOK 2R 90/500 L/P 900/500,560
- Convection Casing (DP):*CHOPOK 2R 90/330 L/P 900/500,560-DP*
  CHOPOK 2R 90/450 L/P 900/500,560-DP
  CHOPOK 2R 90/500 L/P 900/500,560-DP

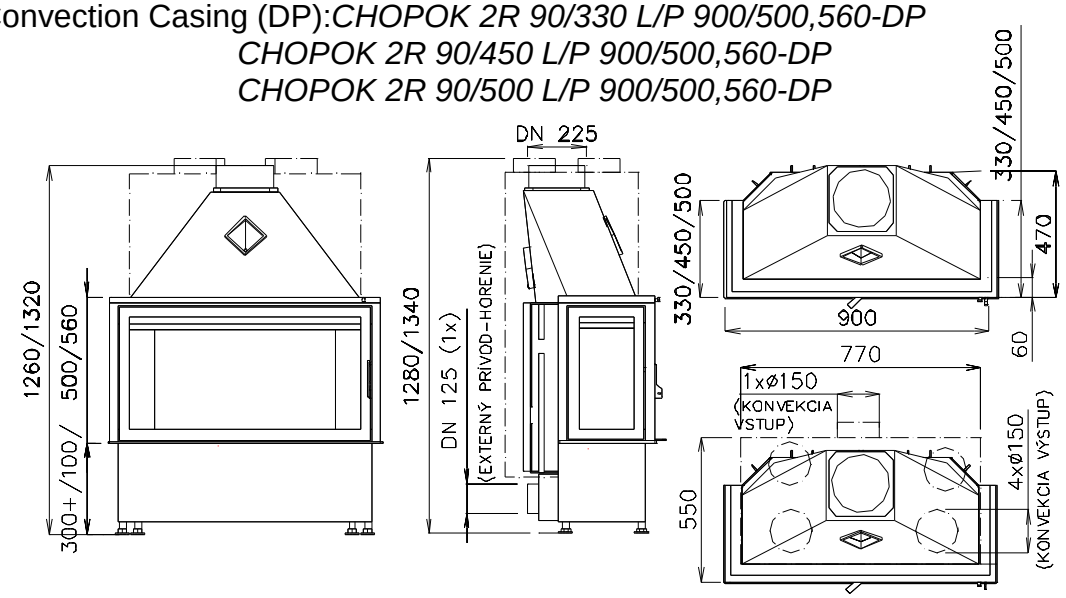

- Vertical Opening Door (VD*): CHOPOK VD 2R 90/380 L/P 940/480,540*
  CHOPOK VD 2R 90/500 L/P 940/480,540
  CHOPOK VD 2R 90/550 L/P 940/480,540

- Technical Data:

Type:CHOPOK 2R 90/330 L/P 900/500,560
Type:CHOPOK 2R 90/450 L/P 900/500,560
Type:CHOPOK 2R 90/500 L/P 900/500,560
Average heat output: 11 kW

Operating heat power:	3,5-14 kW
Flue gas mass flow:	18 g/s
Flue gas temperature:	300 ^{o}C
Emission of CO to 13 % O2:	0,15%
Pressure required:	12 Pa
Weight:CHOPOK 2R 90/330 L/P 900/500,560	210/225
CHOPOK 2R 90/450 L/P 900/500,560	205/220
CHOPOK 2R 90/500 L/P 900/500,560	200/215

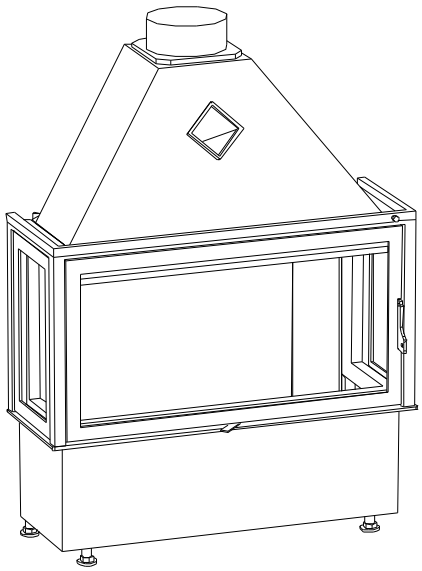

Technical Sheet

CHOPOK 2R 90/330 L/P 1000/500,560 Range 1000
CHOPOK 2R 90/450 L/P 1000/500,560
CHOPOK 2R 90/500 L/P 1000/500,560 .

- Basic Model: **CHOPOK 2R 90/330 L/P 1000/500,560**
  CHOPOK 2R 90/450 L/P 1000/500,560
  CHOPOK 2R 90/500 L/P 1000/500,560
- Convection Casing (DP):*CHOPOK 2R 90/330 L/P 1000/500,560-DP*
  CHOPOK 2R 90/450 L/P 1000/500,560-DP
  CHOPOK 2R 90/500 L/P 1000/500,560-DP

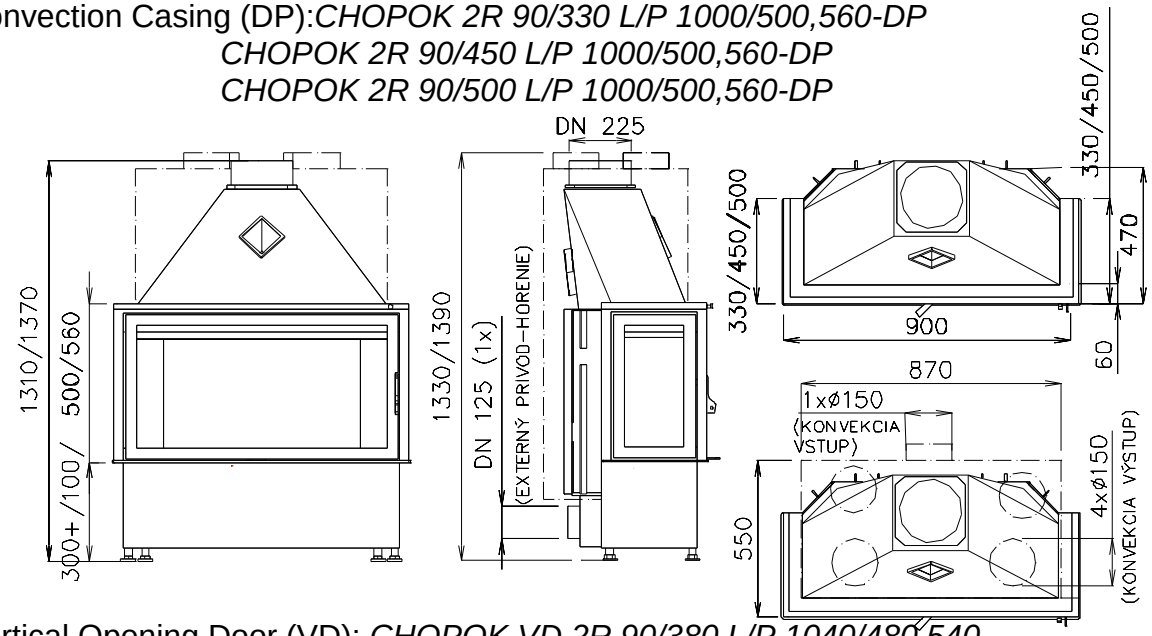

- Vertical Opening Door (VD): *CHOPOK VD 2R 90/380 L/P 1040/480,540*
  CHOPOK VD 2R 90/500 L/P 1040/480,540
  CHOPOK VD 2R 90/550 L/P 1040/480,540

- Technical Data:

Type:CHOPOK 2R 90/330 L/P 1000/500,560
Type:CHOPOK 2R 90/450 L/P 1000/500,560
Type:CHOPOK 2R 90/500 L/P 1000/500,560
Average heat output: 12 kW

Operating heat power:	4-15 kW
Flue gas mass flow:	18 g/s
Flue gas temperature:	300 ^{o}C
Emission of CO to 13 % O2:	0,20%
Pressure required:	12 Pa
Weight:CHOPOK 2R 90/330 L/P 1000/500,560	240/255
CHOPOK 2R 90/450 L/P 1000/500,560	235/250
CHOPOK 2R 90/500 L/P 1000/500,560	225/245

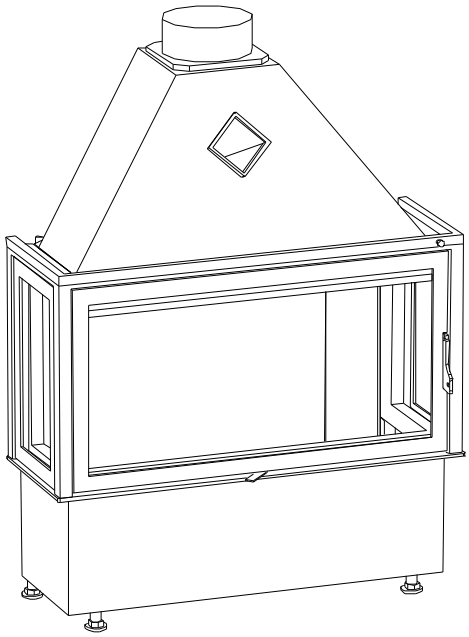

Technical Sheet

CHOPOK R 90 S/450 L/P 450/440,500,560

Range 450

- Basic Model: **CHOPOK R 90 S/450 L/P 450/440,500,560**
- Convection Casing (DP):*CHOPOK R 90 S/450 L/P 450/440,500,560-DP*

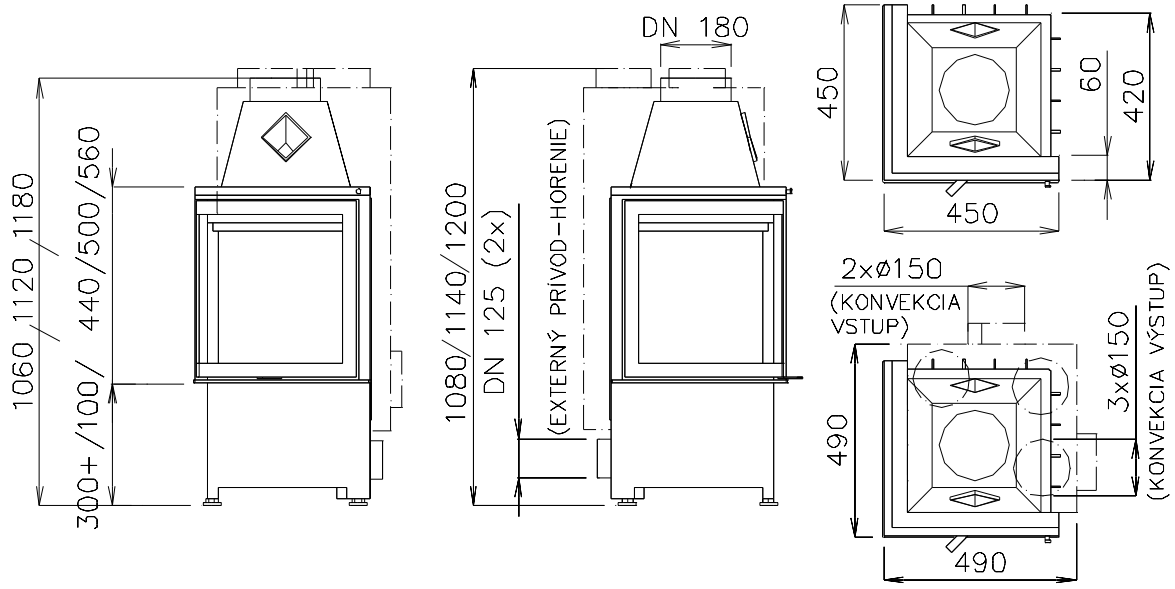

- Vertical Opening Door (VD): *CHOPOK VD R 90 S/500 L/P 500/420,480,540*

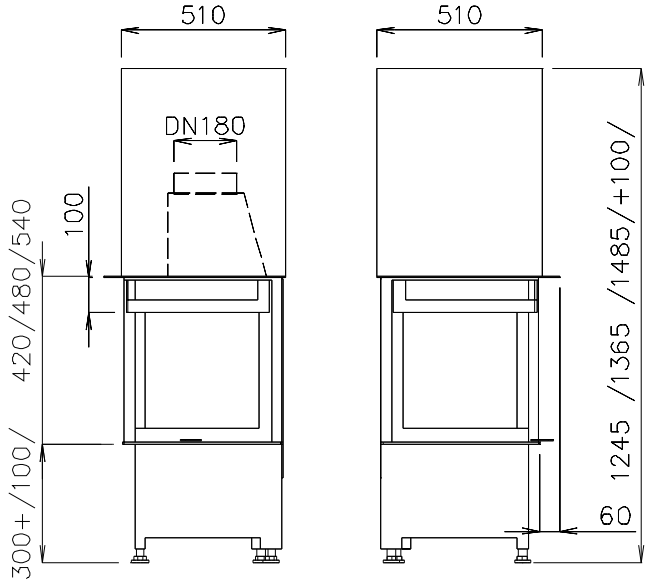

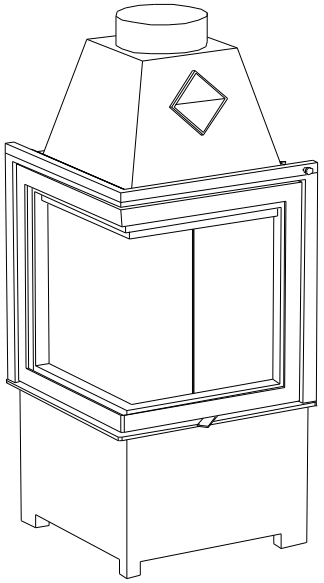

- Technical Data:

Type:CHOPOK R 90 S/450 L/P 450/440,500,560
Average heat output: 5 kW

Operating heat power:	1,5-6,5 kW
Flue gas mass flow:	5 g/s
Flue gas temperature:	205 ^{o}C
Emission of CO to 13 % O2:	0,15%
Pressure required:	12 Pa
Weight:CHOPOK R 90 S/450 L/P 450/440,500,560	135/140/145
CHOPOK VD R 90 S/500 L/P 500/420,480,540	160/165/170

Technical Sheet

CHOPOK R 90 S/225 L/P 550/440,500,560 Range 550
CHOPOK R 90 S/330 L/P 550/440,500,560 .

- Basic Model: **CHOPOK R 90 S/225 L/P 550/440,500,560**
  CHOPOK R 90 S/330 L/P 550/440,500,560
- Convection Casing (DP):*CHOPOK R 90 S/225 L/P 550/440,500,560-DP*
  CHOPOK R 90 S/330 L/P 550/440,500,560-DP

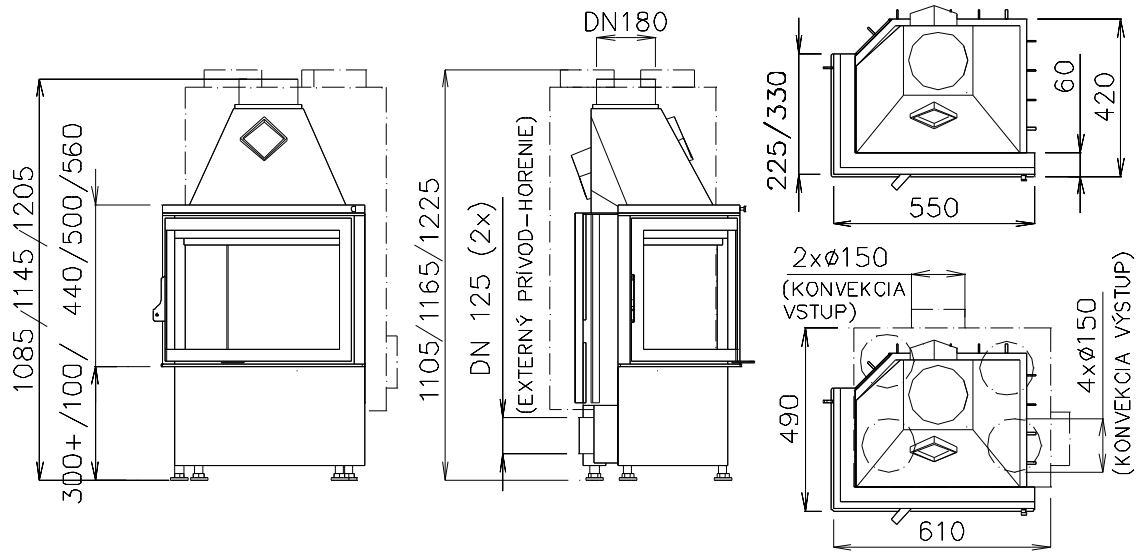

- Vertical Opening Door (VD): *CHOPOK VD R 90 S/275 L/P 600/420,480,540*
  CHOPOK VD R 90 S/380 L/P 600/420,480,540

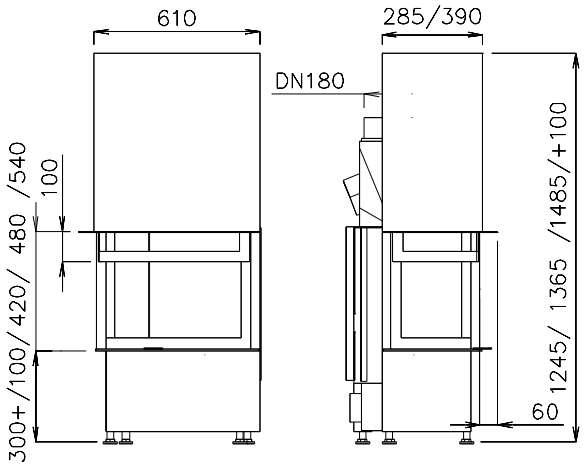

- Technical Data:

Type:CHOPOK R 90 S/225 L/P 550/440,500,560
Type:CHOPOK R 90 S/330 L/P 550/440,500,560
Average heat output: 8 kW

Operating heat power:	2-10 kW
Flue gas mass flow:	12 g/s
Flue gas temperature:	240 ^{o}C
Emission of CO to 13 % O2:	0,12%
Pressure required:	12 Pa
Weight:CHOPOK R 90 S/225 L/P 550/440,500,560	140/145/150
CHOPOK VD R 90 S/275 L/P 600/420,480,540	170/175/180
CHOPOK R 90 S/330 L/P 550/440,500,560	135/140/145
CHOPOK VD R 90 S/380 L/P 600/420,480,540	165/170/175

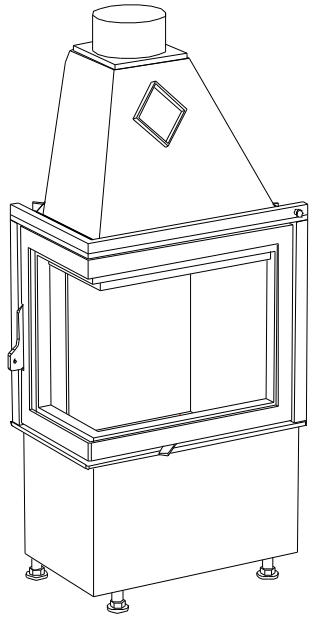

Technical Sheet

CHOPOK R 90 S/225 L/P 600/440,500,560 Range 600
CHOPOK R 90 S/300 L/P 600/440,500,560 .

- Basic Model: **CHOPOK R 90 S/225 L/P 600/440,500,560**
  CHOPOK R 90 S/330 L/P 600/440,500,560
- Convection Casing (DP):*CHOPOK R 90 S/225 L/P 600/440,500,560-DP*
  CHOPOK R 90 S/330 L/P 600/440,500,560-DP

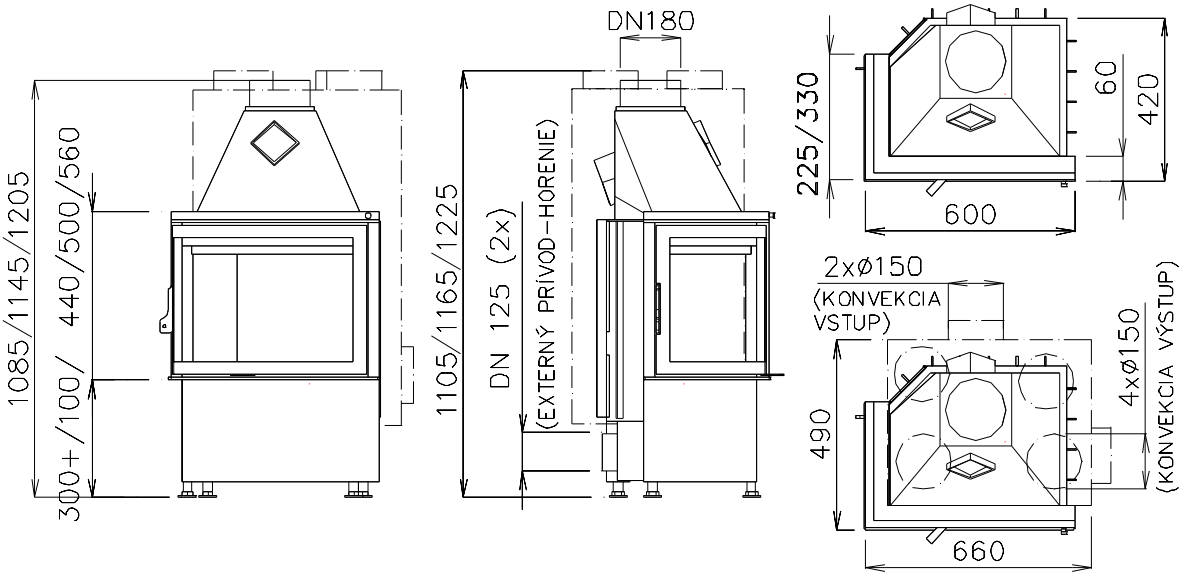

- Vertical Opening Door (VD): *CHOPOK VD R 90 S/275 L/P 650/420,480,540*
  CHOPOK VD R 90 S/380 L/P 650/420,480,540

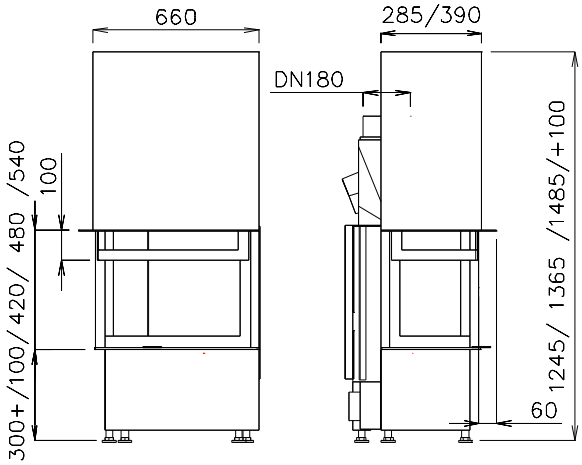

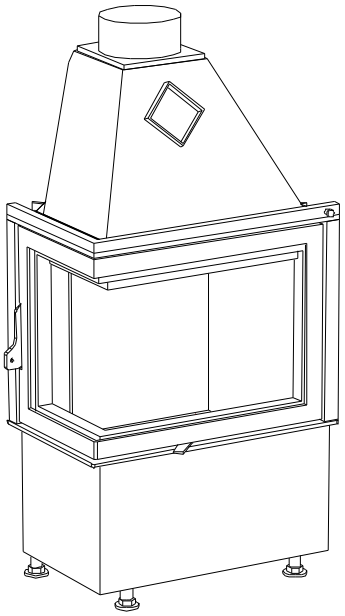

- Technical Data:

Type:CHOPOK R 90 S/225 L/P 600/440,500,560
Type:CHOPOK R 90 S/330 L/P 600/440,500,560
Average heat output: 8,5 kW

Operating heat power:	2,5-10,5 kW
Flue gas mass flow:	15 g/s
Flue gas temperature:	250 °C
Emission of CO to 13 % O2:	0,12%
Pressure required:	12 Pa
Weight:CHOPOK R 90 S/225 L/P 600/440,500,560	150/160/170
CHOPOK VD R 90 S/275 L/P 650/420,480,540	185/195/205
CHOPOK R 90 S/330 L/P 600/440,500,560	145/155/165
CHOPOK VD R 90 S/380 L/P 650/420,480,540	180/190/200

Technical Sheet

CHOPOK R 90 S/225 L/P 670/440,500,560
CHOPOK R 90 S/330 L/P 670/440,500,560

Range 670

- Basic Model: **CHOPOK R 90 S/225 L/P 670/440,500,560**
  CHOPOK R 90 S/330 L/P 670/440,500,560
- Convection Casing (DP): *CHOPOK R 90 S/225 L/P 670/440,500,560-DP*
  CHOPOK R 90 S/330 L/P 670/440,500,560-DP

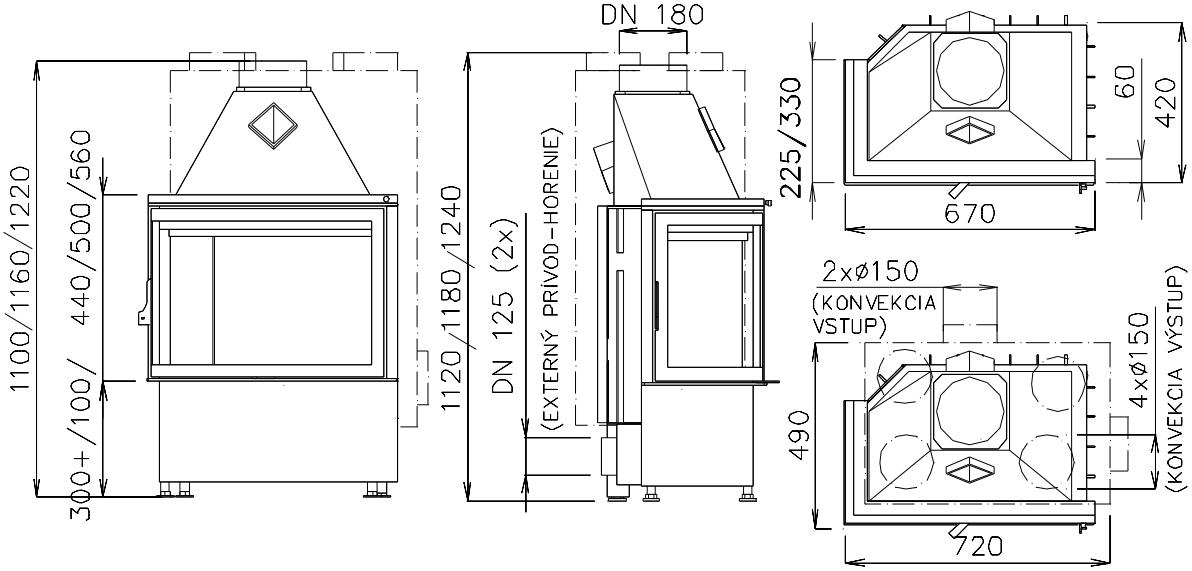

- Vertical Opening Door (VD): *CHOPOK VD R 90 S/275 L/P 720/420,480,540*
  CHOPOK VD R 90 S/380 L/P 720/420,480,540

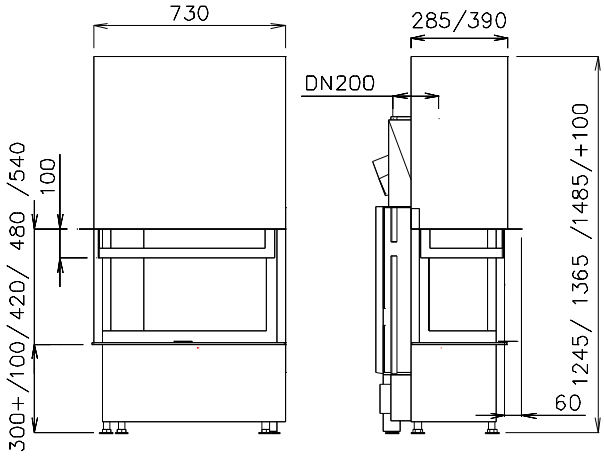

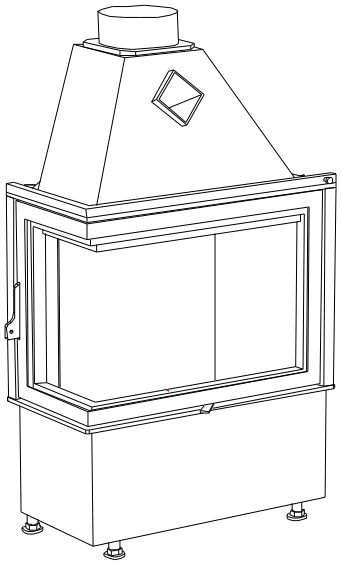

- Technical Data:

Type: CHOPOK R 90 S/225 L/P 670/440,500,560
Type: CHOPOK R 90 S/330 L/P 670/440,500,560

Average heat output:	9 kW
Operating heat power:	3-11 kW
Flue gas mass flow:	20 g/s
Flue gas temperature:	280 °C
Emission of CO to 13 % O2:	0,10%
Pressure required:	12 Pa
Weight: CHOPOK R 90 S/225 L/P 670/440,500,560	165/175/185
CHOPOK VD R 90 S/275 L/P 720/420,480,540	205/215/225
CHOPOK R 90 S/330 L/P 670/440,500,560	160/170/180
CHOPOK VD R 90 S/380 L/P 720/420,480,540	200/210/220

Technical Sheet

CHOPOK R 90 S/225 L/P 780/500,560
CHOPOK R 90 S/330 L/P 780/500,560

Range 780

- Basic Model: **CHOPOK R 90 S/225 L/P 780/500,560**
  CHOPOK R 90 S/330 L/P 780/500,560
- Convection Casing (DP):*CHOPOK R 90 S/225 L/P 780/500,560-DP*
  CHOPOK R 90 S/330 L/P 780/500,560-DP

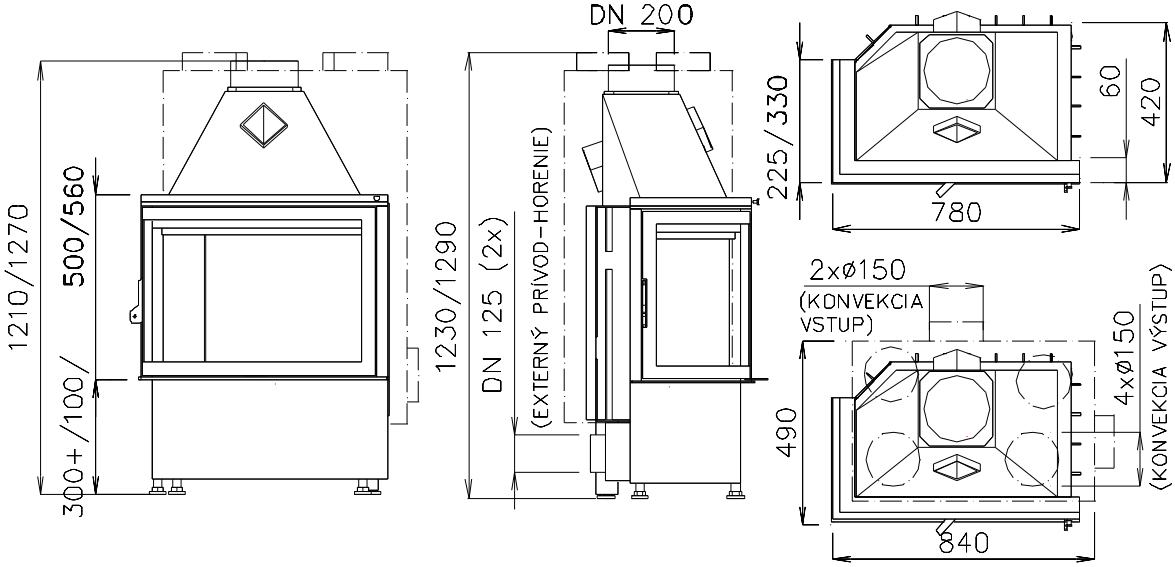

- Vertical Opening Door (VD): *CHOPOK VD R 90 S/275 L/P 830/480,540*
  CHOPOK VD R 90 S/380 L/P 830/480,540

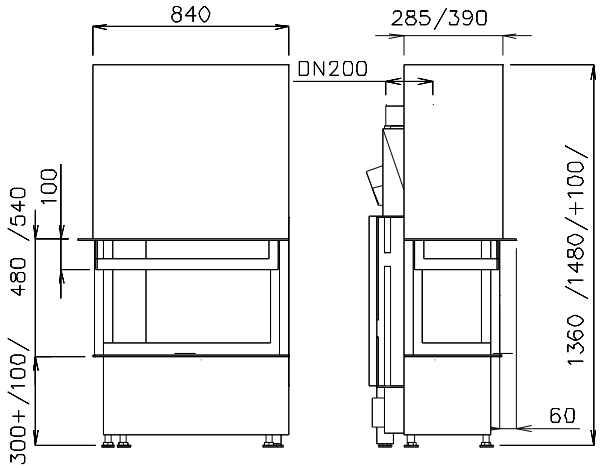

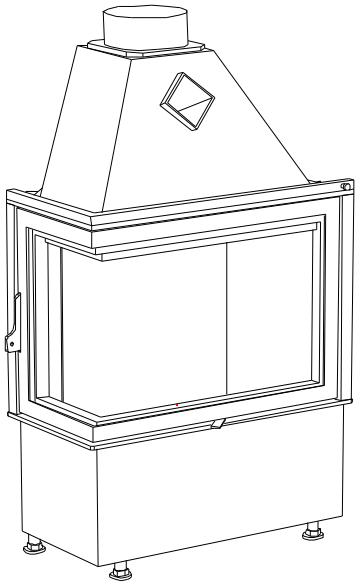

- Technical Data:

Type:CHOPOK R 90 S/225 L/P 780/500,560
Type:CHOPOK R 90 S/330 L/P 780/500,560
Average heat output: 10 kW

Operating heat power:	3-12,5 kW
Flue gas mass flow:	20 g/s
Flue gas temperature:	320 °C
Emission of CO to 13 % O2:	0,10%
Pressure required:	12 Pa
Weight:CHOPOK R 90 S/225 L/P 780/500,560	195/210
CHOPOK VD R 90 S/275 L/P 830/480,540	215/250
CHOPOK R 90 S/330 L/P 780/500,560	190/205
CHOPOK VD R 90 S/380 L/P 830/480,540	210/240

Technical Sheet

CHOPOK O 550/440,500,560

Range 550

- Basic Model: **CHOPOK O 550/440,500,560**
- Convection Casing (DP):*CHOPOK O 550/440,500,560-DP*

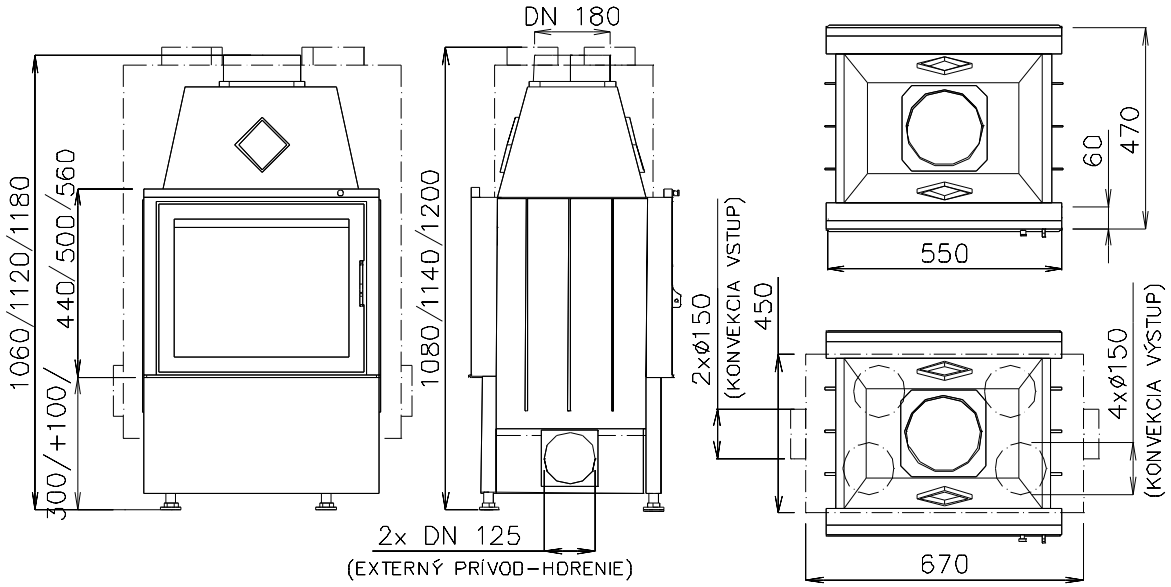

Vertical Opening Door (VD): *CHOPOK 0 VD*

- *620/420,480,540*

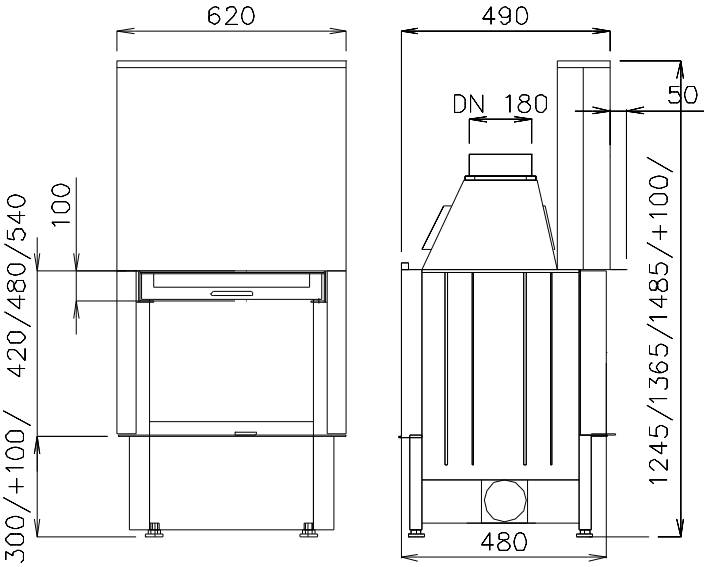

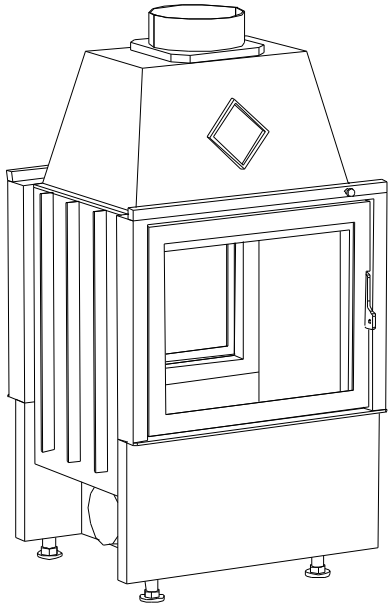

- Technical Data:

Type:	CHOPOK O 550/440,500,560
Average heat output:	8 kW
Operating heat power:	2-10 kW
Flue gas mass flow:	12 g/s
Flue gas temperature:	240 °C
Emission of CO to 13 % O2:	0,12%
Pressure required:	12 Pa
Weight: CH O 550/440/500/560	135/140/145 kg

CH O VD 620/420/480/540 155/160/165 kg

Technical Sheet

CHOPOK O 600/440,500,560

Range 600

- Basic Model**: CHOPOK O 600/440,500,560**
- Convection Casing (DP):*CHOPOK O 600/440,500,560-DP*

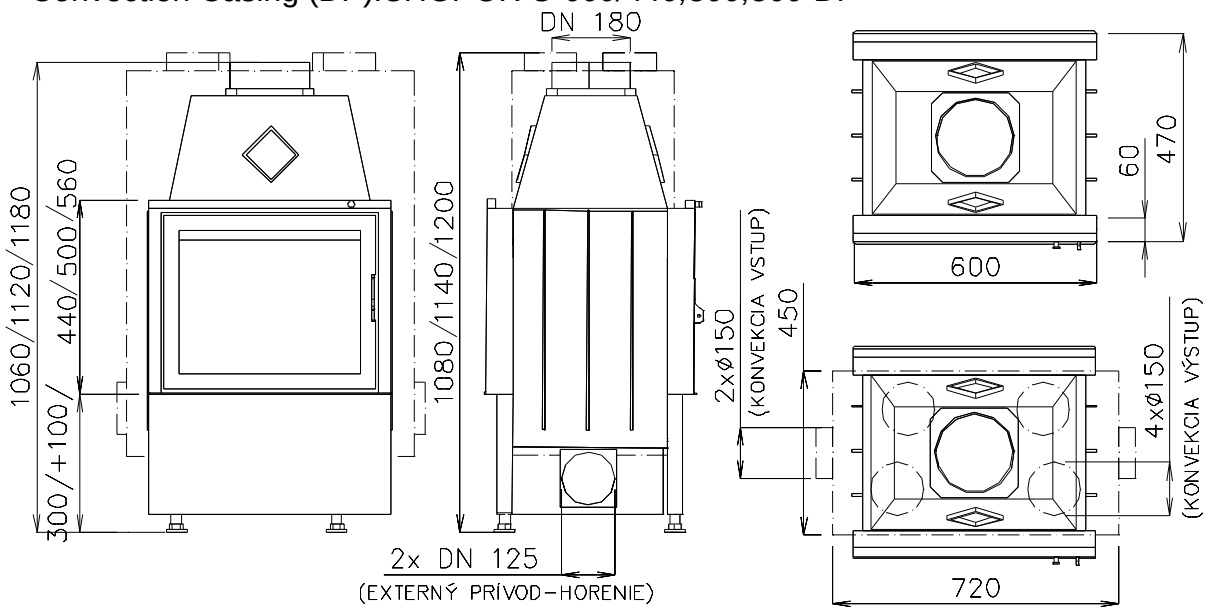

- Vertical Opening Door (VD): *CHOPOK 0 VD 670/420,480,540*

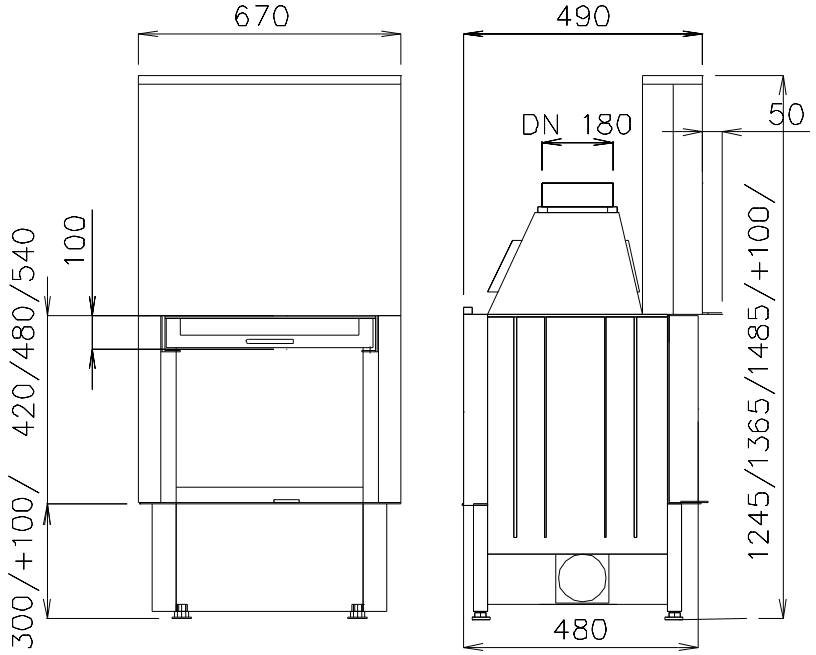

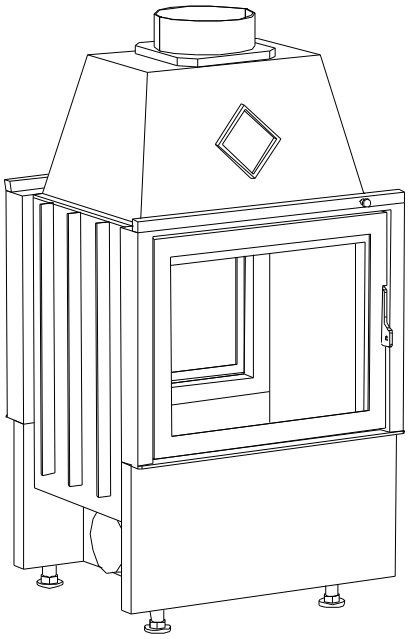

- Technical Data:

Type:	CHOPOK O 600/440,500,560
Average heat output:	8,5 kW
Operating heat power:	2,5-10,5 kW
Flue gas mass flow:	15 g/s
Flue gas temperature:	250 °C
Emission of CO to 13 % O2:	0,12%
Pressure required:	12 Pa
Weight: CH O 600/440/500/560	155/160/165 kg

CH O VD 670/420/480/540 180/185/190 kg

Technical Sheet

CHOPOK O 670/440,500,560

Range 670

- Basic Model: **CHOPOK O 670/440,500,560**
- Convection Casing (DP):*CHOPOK O 670/440,500,560-DP*

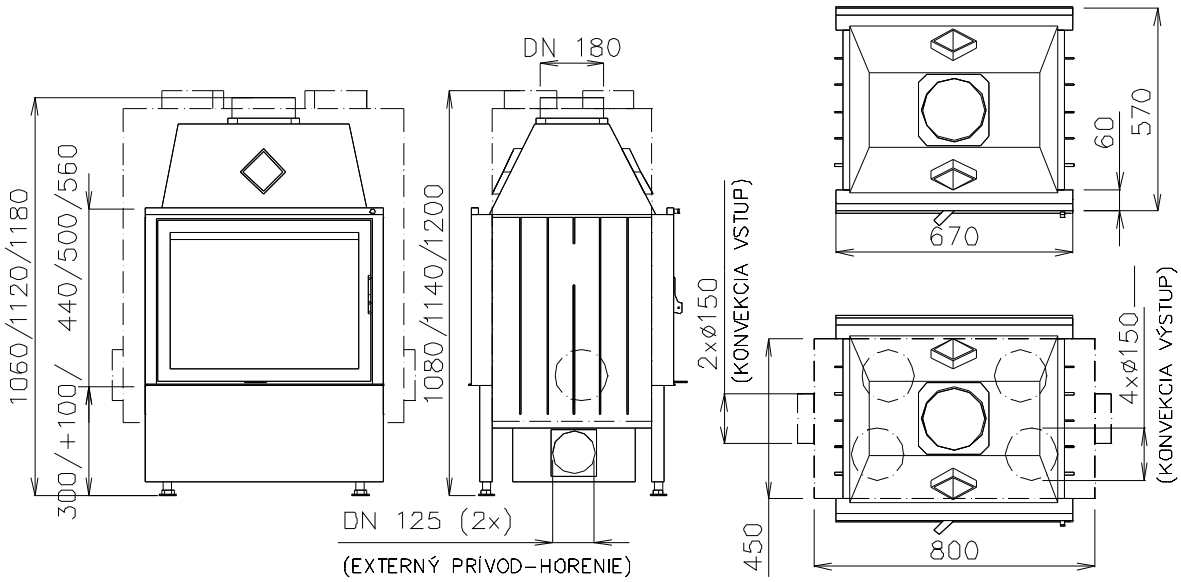

- Vertical Opening Door (VD): *CHOPOK 0 VD 740/420,480,540*

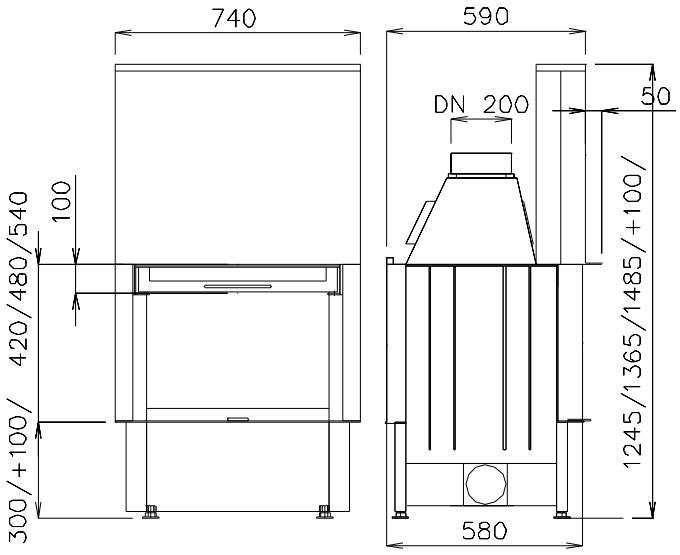

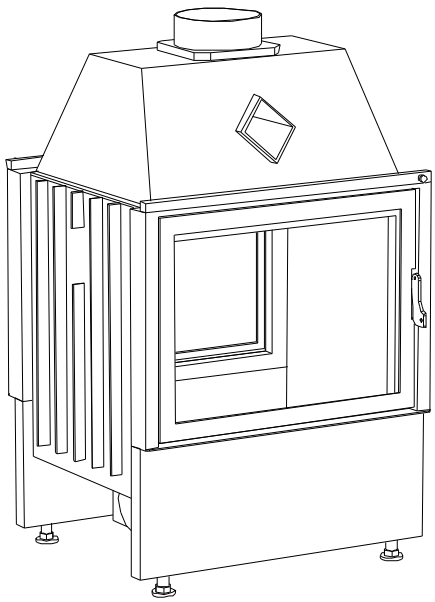

- Technical Data:

Type:	CHOPOK O 670/440,500,560
Average heat output:	9 kW
Operating heat power:	3-11 kW
Flue gas mass flow:	20 g/s
Flue gas temperature:	280 °C
Emission of CO to 13 % O2:	0,10%
Pressure required:	12 Pa
Weight: CH O 670/440/500/560	190/200/210 kg

CH O VD 740/420/480/540 220/230/240 kg

Technical Sheet

CHOPOK O 780/500,560

Range 780

- Basic Model: **CHOPOK O 780/500,560**
- Convection Casing (DP):*CHOPOK O 780/500,560-DP*

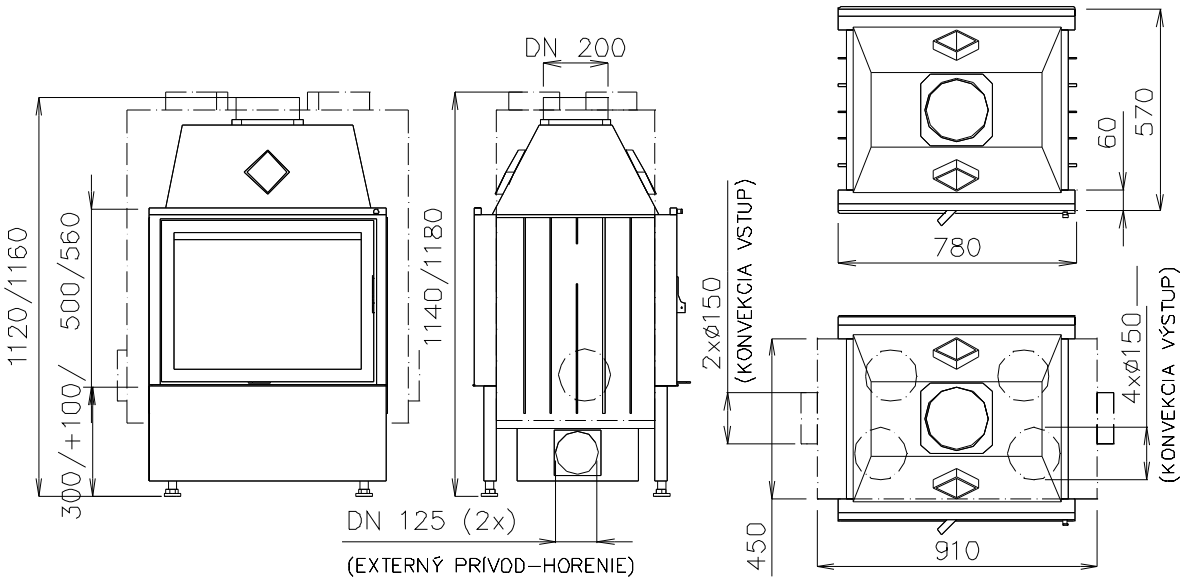

- Vertical Opening Door (VD): *CHOPOK 0 VD 850/480,540*

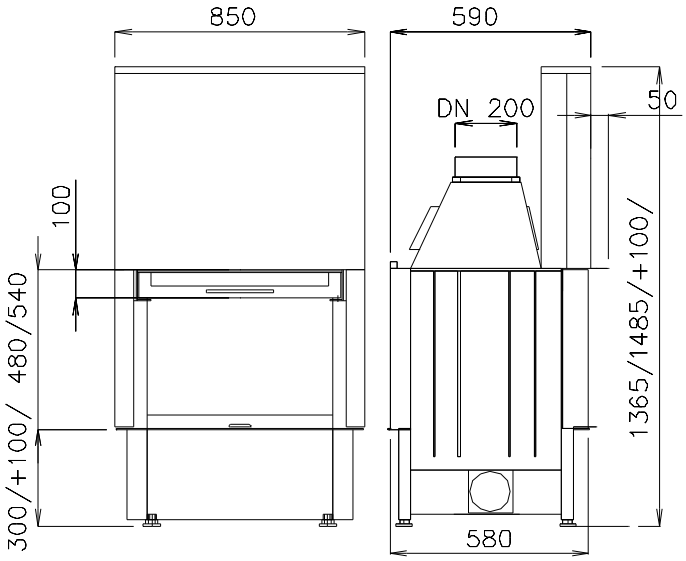

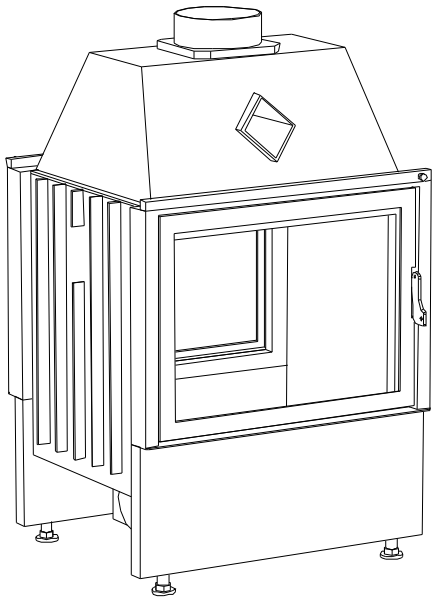

- Technical Data:

Type:	CHOPOK O 780/500,560
Average heat output:	10 kW
Operating heat power:	3-12,5 kW
Flue gas mass flow:	20 g/s
Flue gas temperature:	320 °C
Emission of CO to 13 % O2:	0,10%
Pressure required:	12 Pa
Weight: CH O 780//500/560	225/240 kg
CH O VD 850/480/540	270/285 kg

Technical Sheet

CHOPOK O 900/500,560

Range 900

- Basic Model: **CHOPOK O 900/500,560**
- Convection Casing (DP):*CHOPOK O 900/500,560-DP*

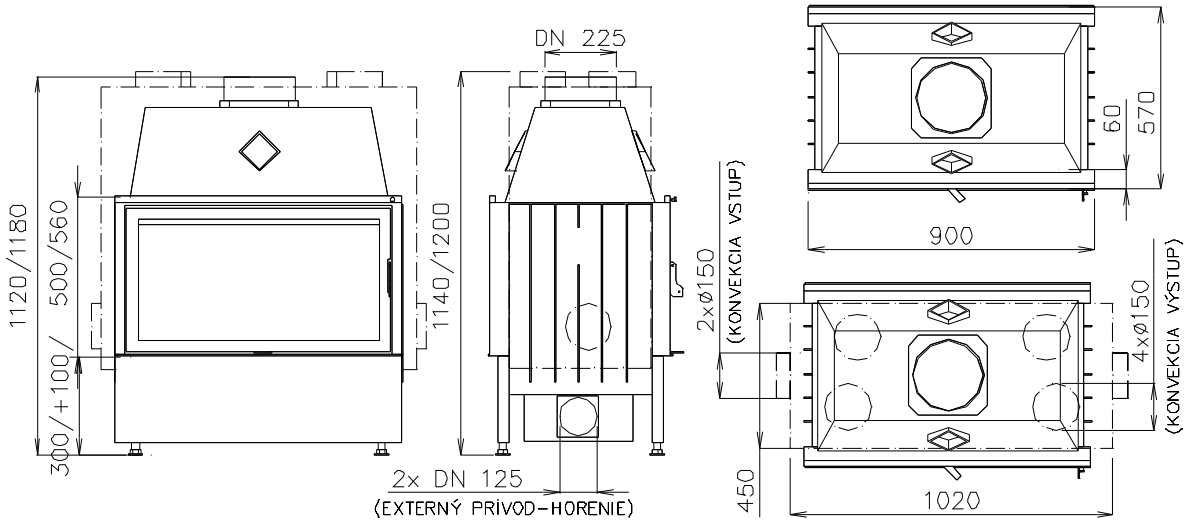

- Vertical Opening Door (VD): *CHOPOK 0 VD 970/480,540*

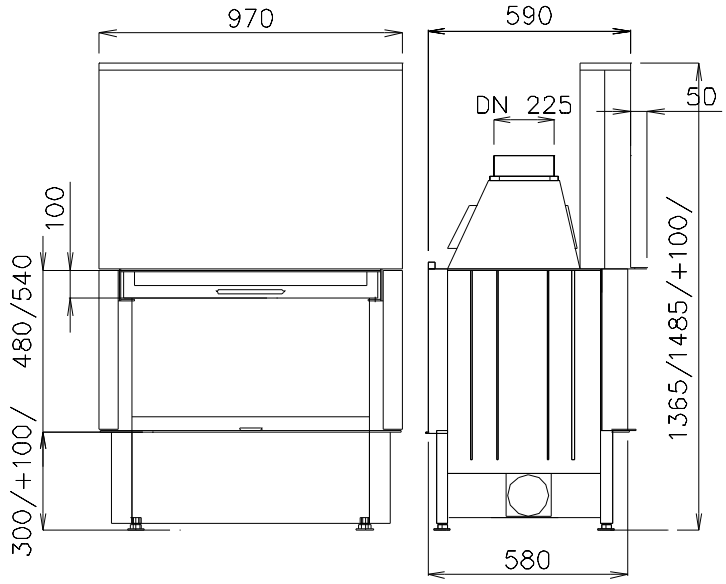

- Technical Data:

Type:	CHOPOK O 900/500,560	
Average heat output:		11 kW
Operating heat power:		3,5-14 kW
Flue gas mass flow:		18 g/s
Flue gas temperature:		300 °C
Emission of CO to 13 % O2:		0,15%
Pressure required:		12 Pa
Weight:	CH O 900//500/560	250/270 kg
	CH O VD 970/480/540	300/320 kg

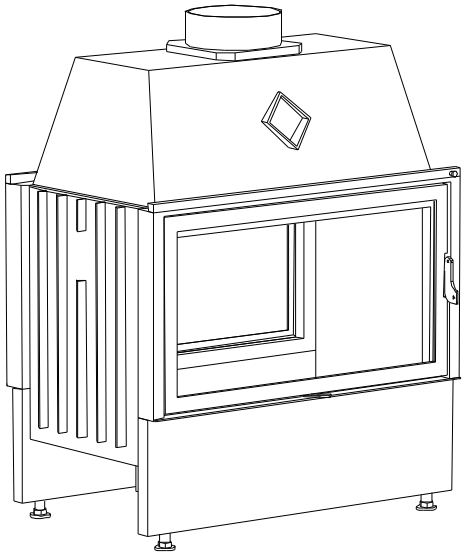

Technical Sheet

CHOPOK O 1000/500,560

Range 1000

- Basic Model: **CHOPOK O 1000/500,560**
- Convection Casing (DP):*CHOPOK O 1000/500,560-DP*

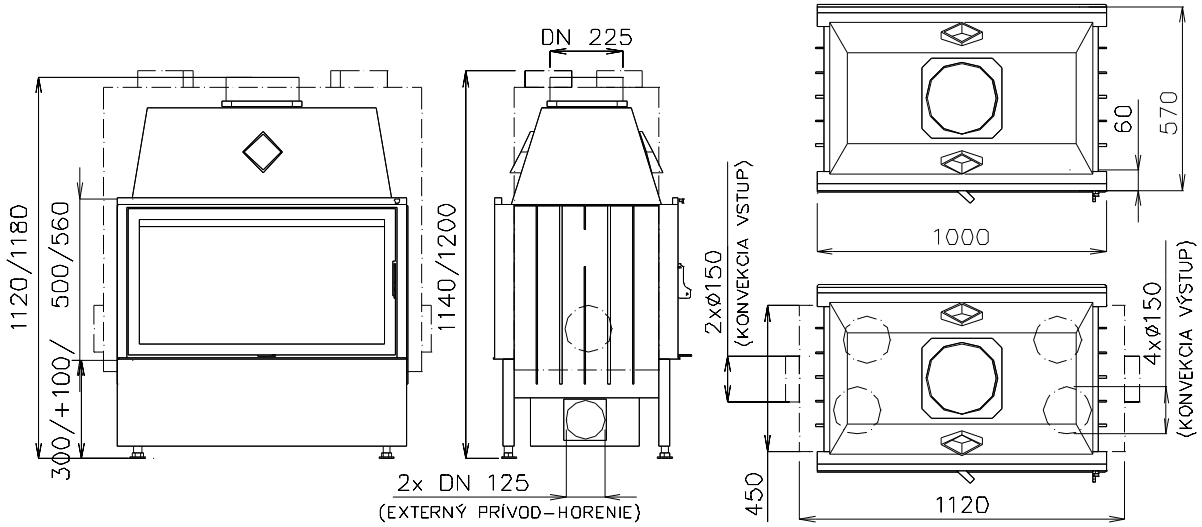

- Vertical Opening Door (VD): *CHOPOK 0 VD 1070/480,540*

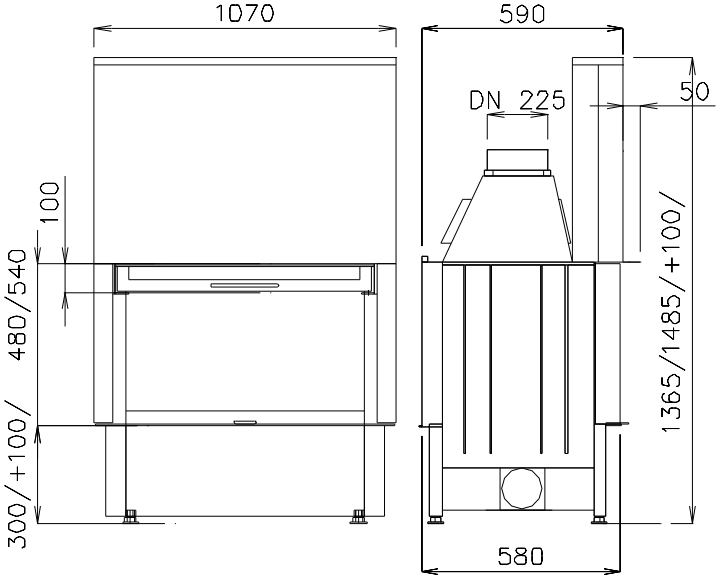

- Technical Data:

Type:	CHOPOK O 1000/500,560
Average heat output:	12 kW
Operating heat power:	4-15 kW
Flue gas mass flow:	18 g/s
Flue gas temperature:	300 °C
Emission of CO to 13 % O2:	0,20%
Pressure required:	12 Pa
Weight: CH O 1000//500/560	280/290 kg
CH O VD 1070/480/540	350/360 kg

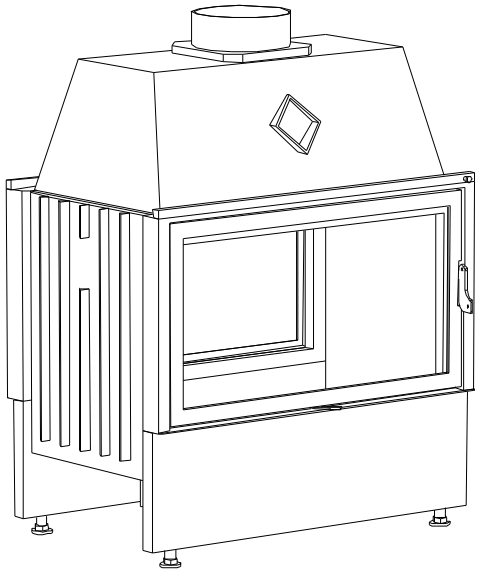

Technical Sheet

CHOPOK R90 O 550/440,500,560

Range 550

- Basic Model: **CHOPOK R90 O 550/440,500,560**
- Convection Casing (DP):*CHOPOK R90 O 550/440,500,560-DP*

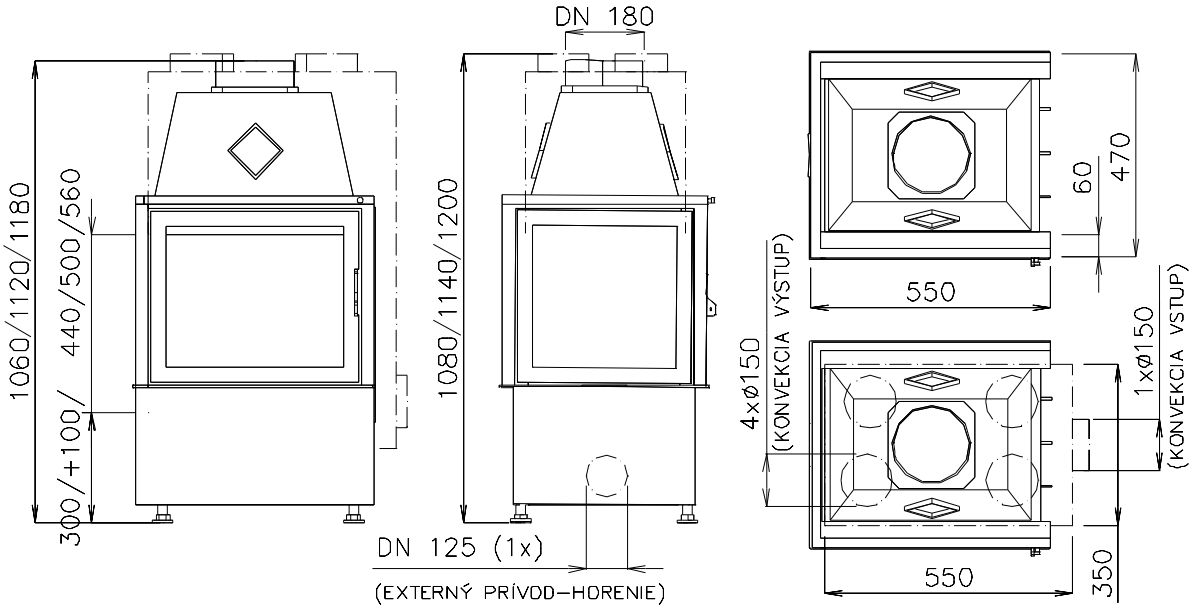

- Vertical Opening Door (VD): *CHOPOK R90 O VD 620/420,480,540*

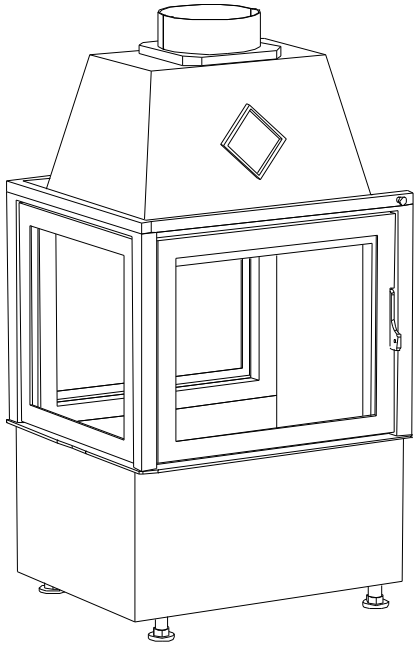

- Technical Data:

Type:	CHOPOK R90 O 550/440,500,560
Average heat output:	8 kW
Operating heat power:	2-10 kW
Flue gas mass flow:	12 g/s
Flue gas temperature:	240 °C
Emission of CO to 13 % O2:	0,12%
Pressure required:	12 Pa
Weight: CH R90 O 550/440/500/560	145/150/155kg
CH R90 O VD 620/420/480/540	

Technical Sheet

CHOPOK R90 O 600/440,500,560

Range 600

- Basic Model: **CHOPOK R90 O 600/440,500,560**
- Convection Casing (DP):*CHOPOK R90 O 600/440,500,560-DP*

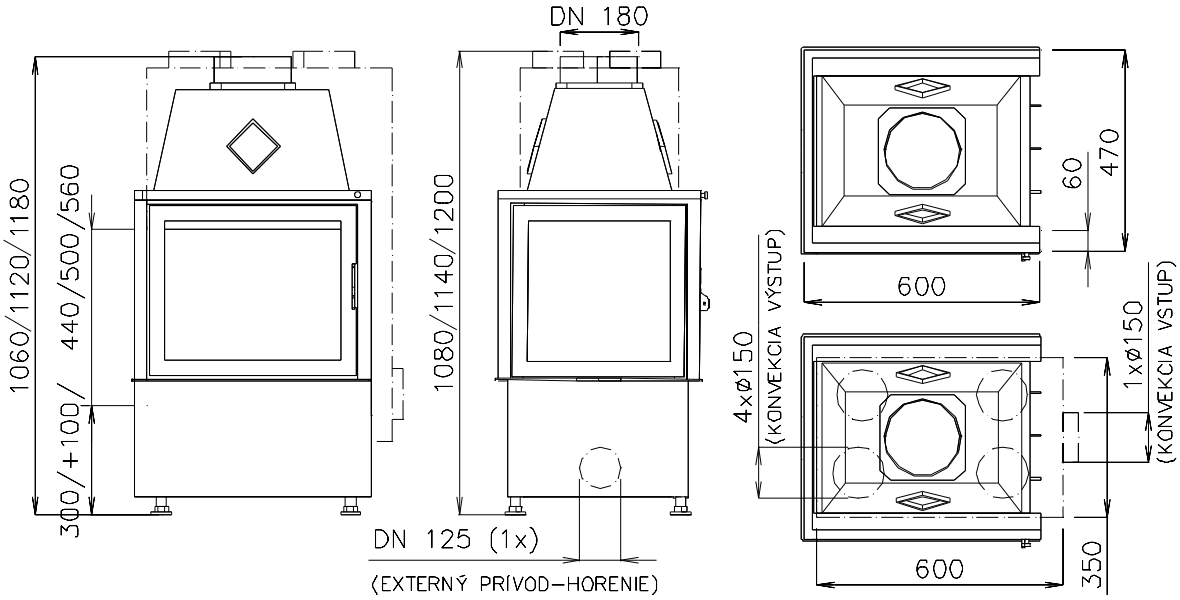

- Vertical Opening Door (VD): *CHOPOK R90 O VD 670/420,480,540*

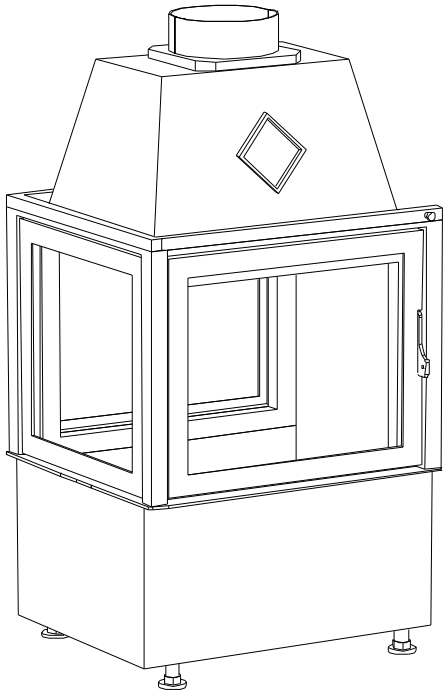

- Technical Data:

Type:	CHOPOK R90 O 600/440,500,560
Average heat output:	8,5 kW
Operating heat power:	2,5-10,5 kW
Flue gas mass flow:	15 g/s
Flue gas temperature:	250 °C
Emission of CO to 13 % O2:	0,10%
Pressure required:	12 Pa
Weight: CH R90 O 600/440/500/560	155/160/165 kg
CH R90 O VD 670/420/480/540	

Technical Sheet

CHOPOK R90 O 670/440,500,560

Range 670

- Basic Model: **CHOPOK R90 O 670/440,500,560**
- Convection Casing (DP):*CHOPOK R90 O 670/440,500,560-DP*

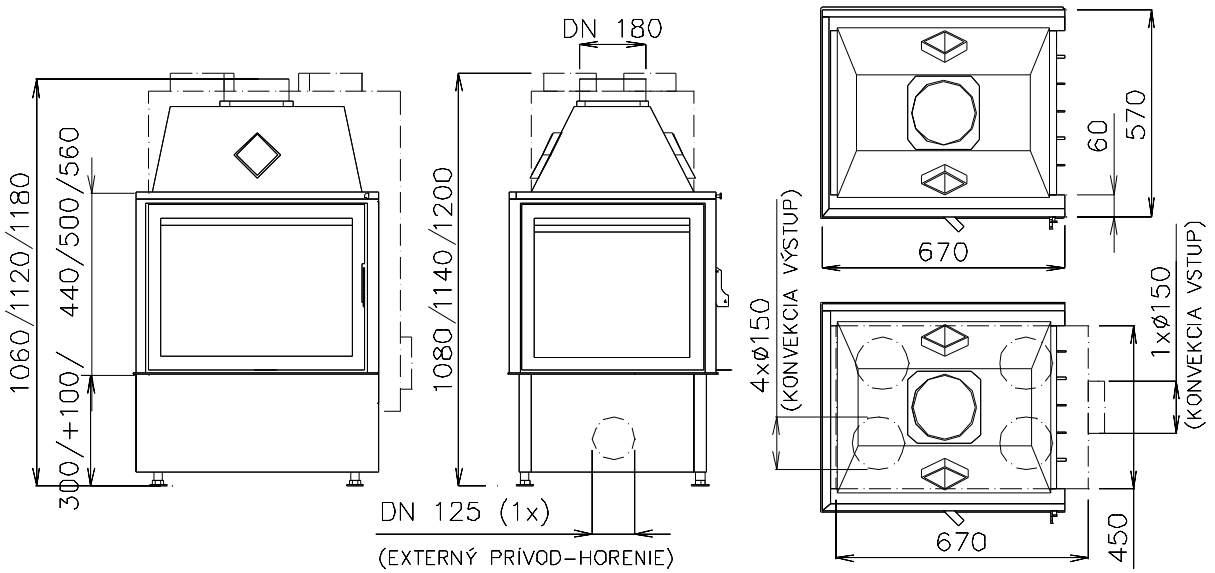

- Vertical Opening Door (VD): *CHOPOK R90 O VD 740/420,480,540*

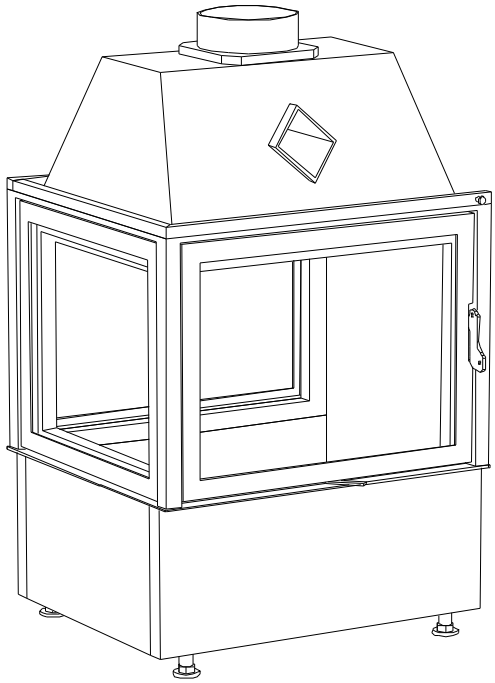

- Technical Data:

Type:	CHOPOK R90 O 670/440,500,560
Average heat output:	9 kW
Operating heat power:	3-11 kW
Flue gas mass flow:	20 g/s
Flue gas temperature:	280 °C
Emission of CO to 13 % O2:	0,10%
Pressure required:	12 Pa
Weight: CH R90 O 670/440/500/560	178/180/185 kg
CH R90 O VD 740/420/480/540	

Technical Sheet

CHOPOK R90 O 780/500,560

Range 780

- Basic Model: **CHOPOK R90 O 780/500,560**
- Convection Casing (DP):*CHOPOK R90 O 780/500,560-DP*

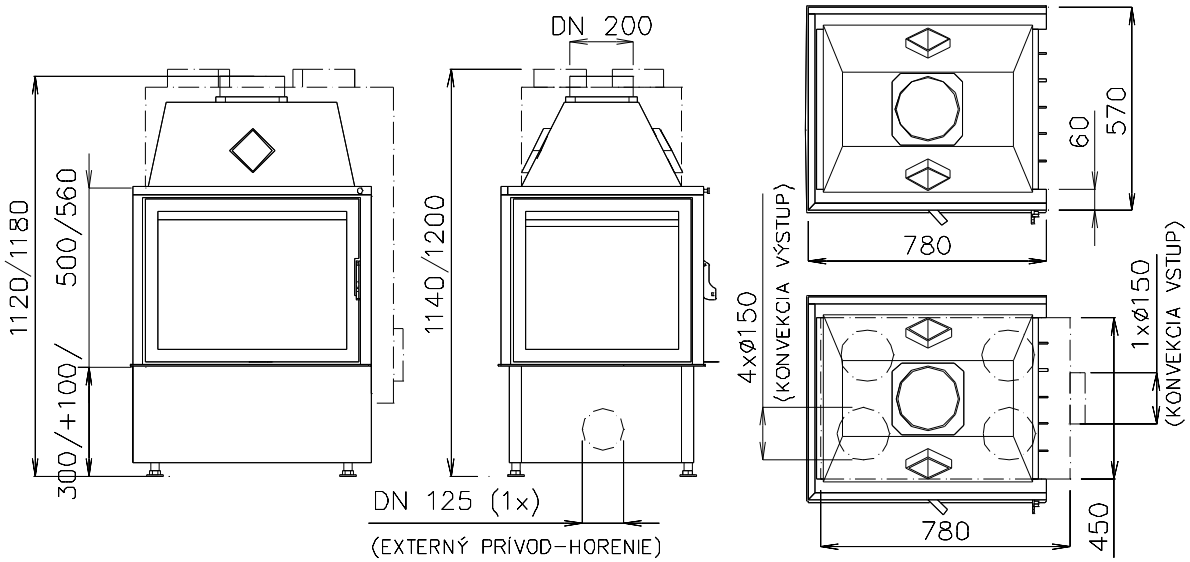

- Vertical Opening Door (VD): *CHOPOK R90 O VD 850/480,540*

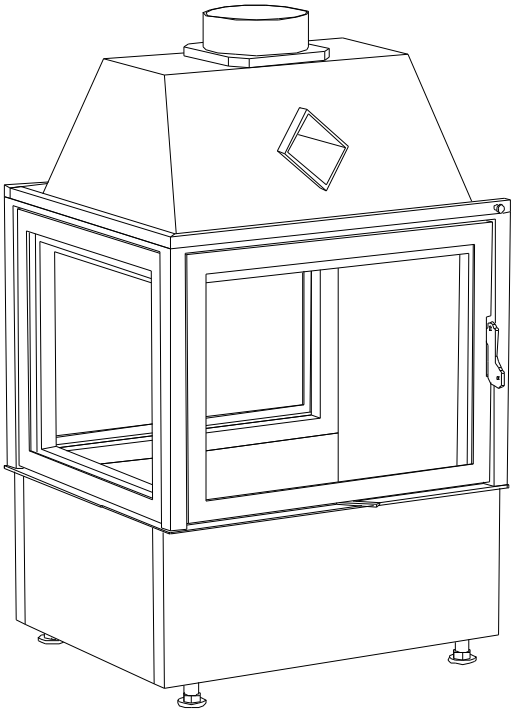

- Technical Data:

Type:	CHOPOK R90 O 780/500,560
Average heat output:	10 kW
Operating heat power:	3-12,5 kW
Flue gas mass flow:	20 g/s
Flue gas temperature:	320 °C
Emission of CO to 13 % O2:	0,10%
Pressure required:	12 Pa
Weight: CH R90 O 780/500/560	210/215 kg
CH R90 O VD 850/480/540	

Technical Sheet

CHOPOK R90 O 900/500,560

Range 900

- Basic Model: **CHOPOK R90 O 900/500,560**
- Convection Casing (DP):*CHOPOK R90 O 900/500,560-DP*

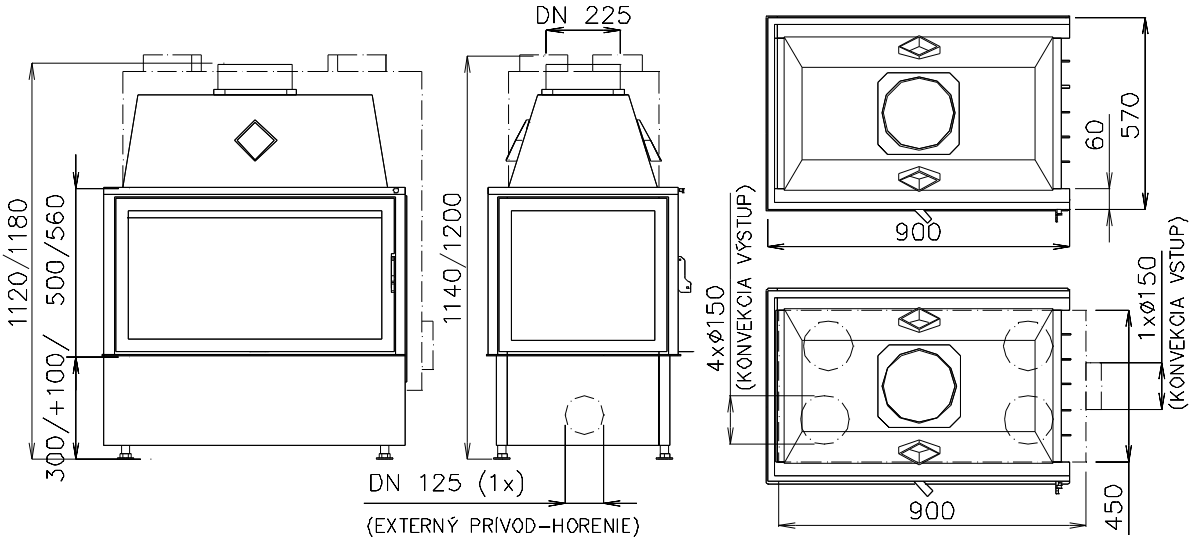

- Vertical Opening Door (VD): *CHOPOK R90 O VD 970/480,540*

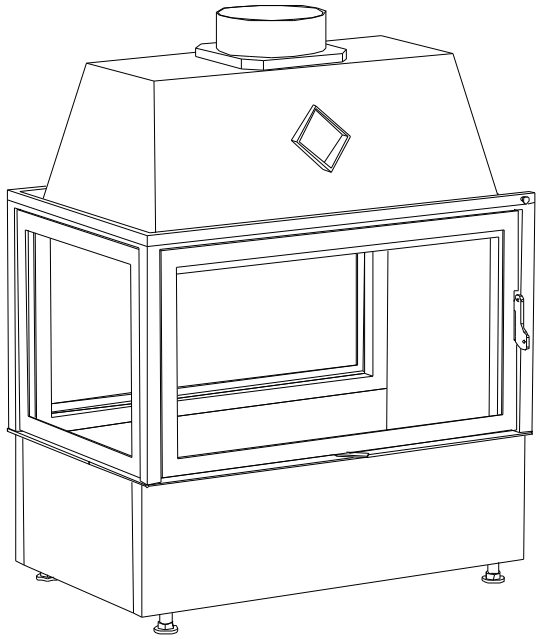

- Technical Data:

Type:	CHOPOK R90 O 900/500,560
Average heat output:	11 kW
Operating heat power:	3,5-14 kW
Flue gas mass flow:	18 g/s
Flue gas temperature:	300 ^{o}C
Emission of CO to 13 % O2:	0,15%
Pressure required:	12 Pa
Weight: CH R90 O 900/500/560	240/250 kg
CH R90 O VD 970/480/540	

Technical Sheet

CHOPOK R90 O 1000/500,560

Range 1000

- Basic Model: **CHOPOK R90 O 1000/500,560**
- Convection Casing (DP):*CHOPOK R90 O 1000/500,560-DP*

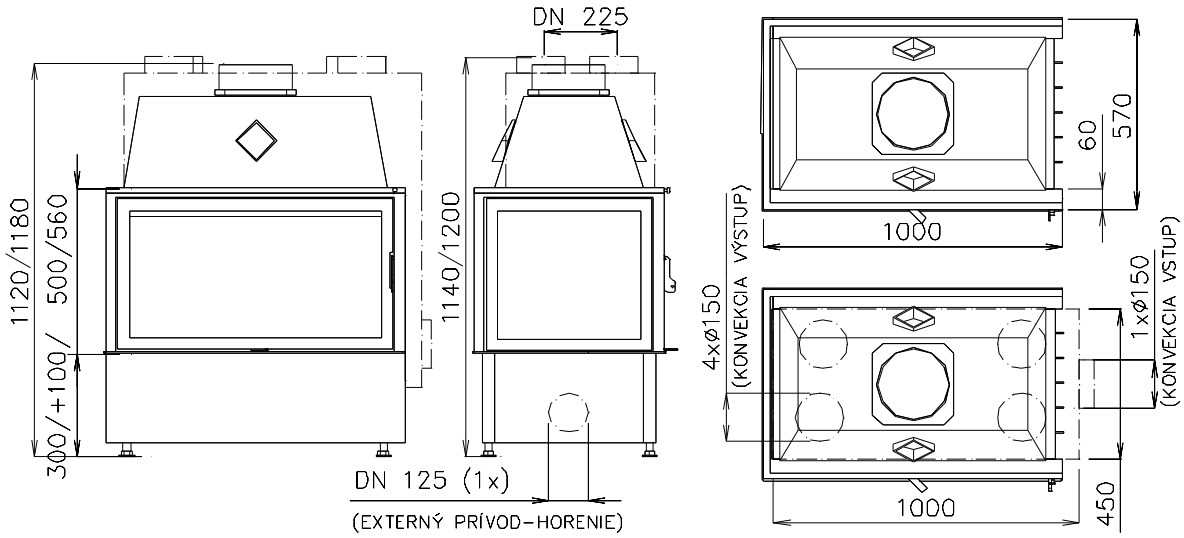

- Vertical Opening Door (VD): *CHOPOK R90 O VD 1070/480,540*

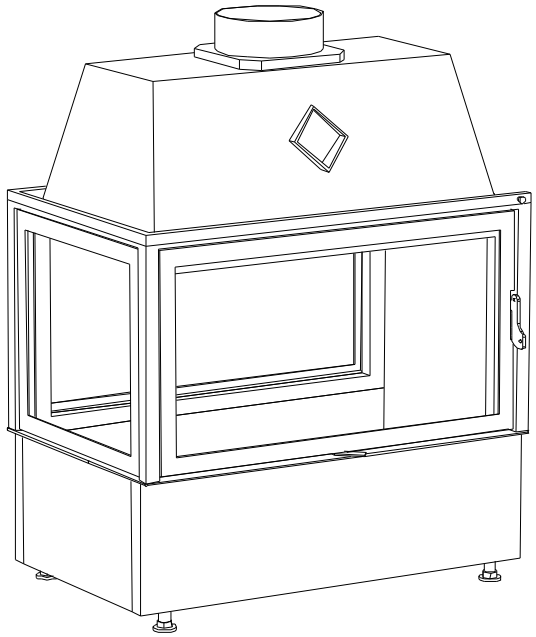

- Technical Data:

Type:	CHOPOK R90 O 1000/500,560
Average heat output:	12 kW
Operating heat power:	4-15 kW
Flue gas mass flow:	18 g/s
Flue gas temperature:	300 ^{o}C
Emission of CO to 13 % O2:	0,20%
Pressure required:	12 Pa
Weight: CH R90 O 1000/500/560	275/285 kg
CH R90 O VD 1070/480/540	

Technical Sheet

CHOPOK/ĎUMBIER O R 135 550/440,500,560

Range 550

- Basic Model: **CHOPOK/ĎUMBIER O R135 550/440,500,560**
- Convection Casing (DP):*CHOPOK/ĎUMBIER O R135 550/440,500,560-DP*

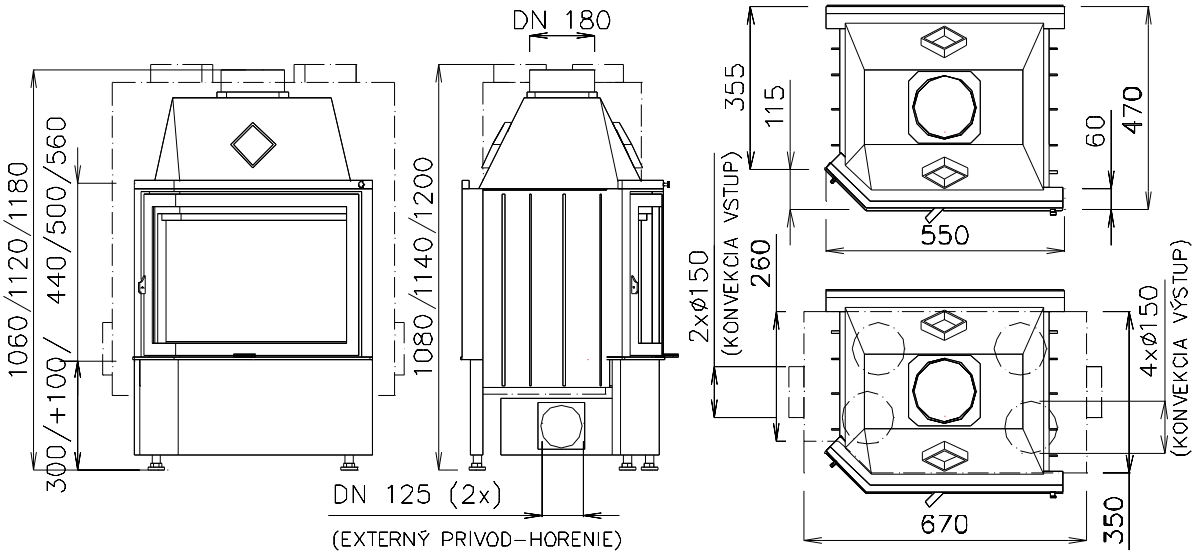

- Vertical Opening Door (VD): *CHOPOK/ĎUMBIER O R135 VD 620/420,480,540*

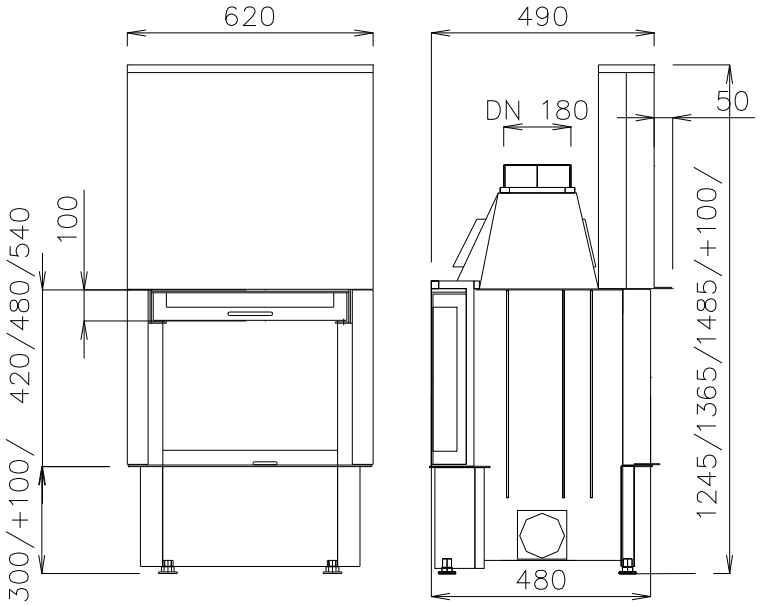

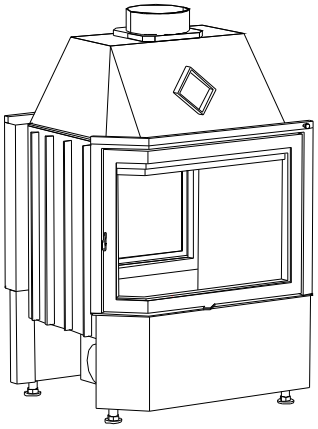

- Technical Data:

Type:	CHOPOK/ĎUMBIER O R135 550/440,500,560
Average heat output:	8 kW
Operating heat power:	2-10 kW
Flue gas mass flow:	12 g/s
Flue gas temperature:	240 ^{o}C
Emission of CO to 13 % O2:	0,12%
Pressure required:	12 Pa
Weight: CH/D O R135 550/440/500/560	135/140/145 kg
CH/D O R135 VD 620/420/480/540	155/160/165 kg

Technical Sheet

CHOPOK/ĎUMBIER O R 135 600/440,500,560

Range 600

- Basic Model: **CHOPOK/ĎUMBIER O R135 600/440,500,560**
- Convection Casing (DP):*CHOPOK/ĎUMBIER O R135 600/440,500,560-DP*

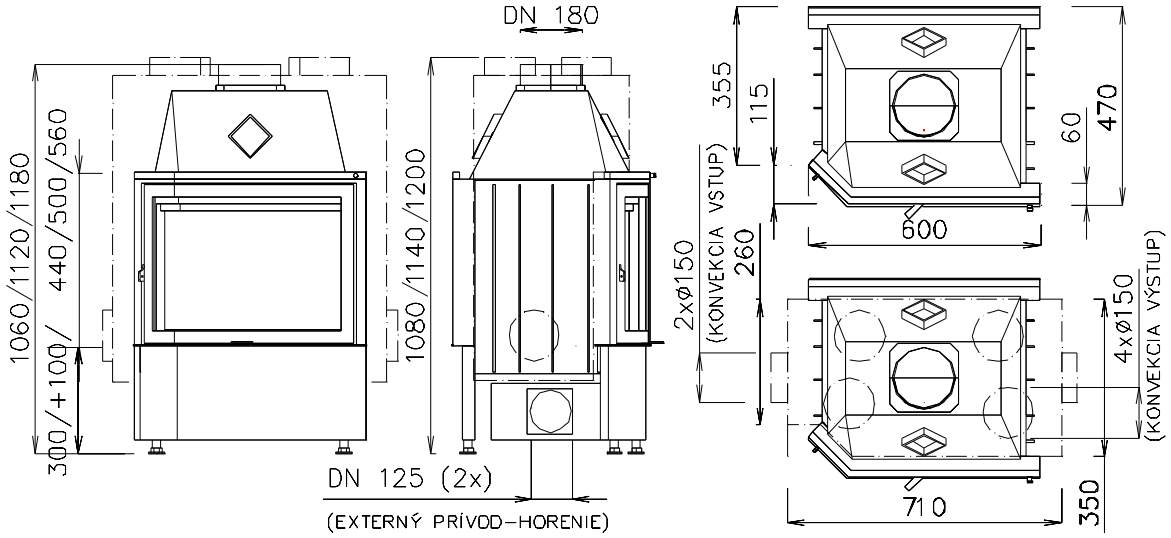

- Vertical Opening Door (VD): *CHOPOK/ĎUMBIER O R135 VD 670/420,480,540*

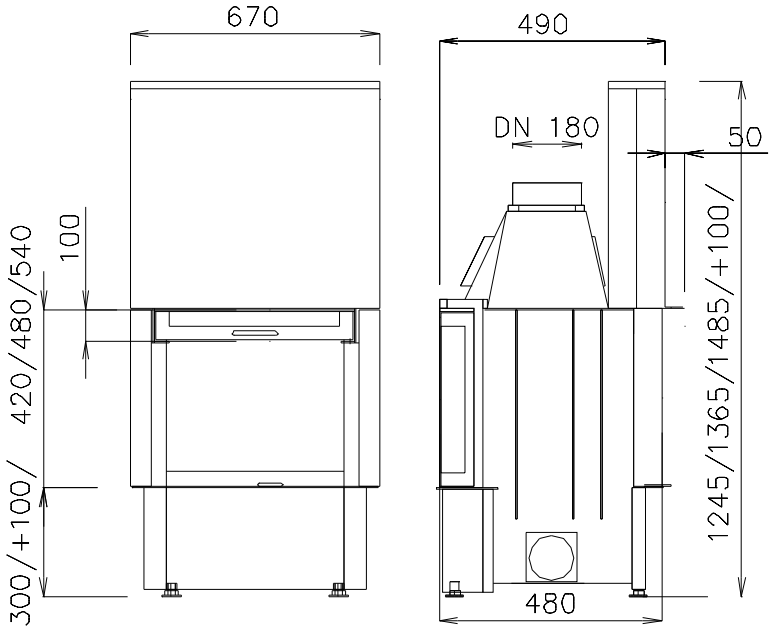

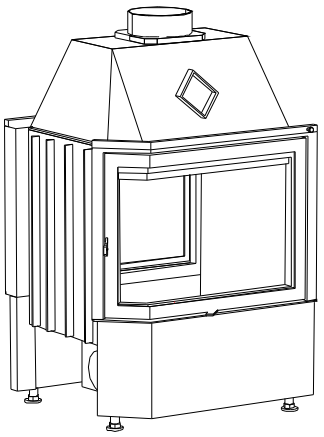

- Technical Data:

Type: CHOPOK/ĎUMBIER O R135 600/440,500,560	
Average heat output:	8,5 kW
Operating heat power:	2,5-10,5 kW
Flue gas mass flow:	15 g/s
Flue gas temperature:	250 °C
Emission of CO to 13 % O2:	0,12%
Pressure required:	12 Pa
Weight: CH/Ď O R135 600/440/500/560	155/160/165 kg
CH/Ď O R135 VD 670/420/480/540	180/185/190 kg

Technical Sheet

CHOPOK/ĎUMBIER O R 135 670/440,500,560

Range 670

- Basic Model: **CHOPOK/ĎUMBIER O R135 670/440,500,560**
- Convection Casing (DP):*CHOPOK/ĎUMBIER O R135 670/440,500,560-DP*

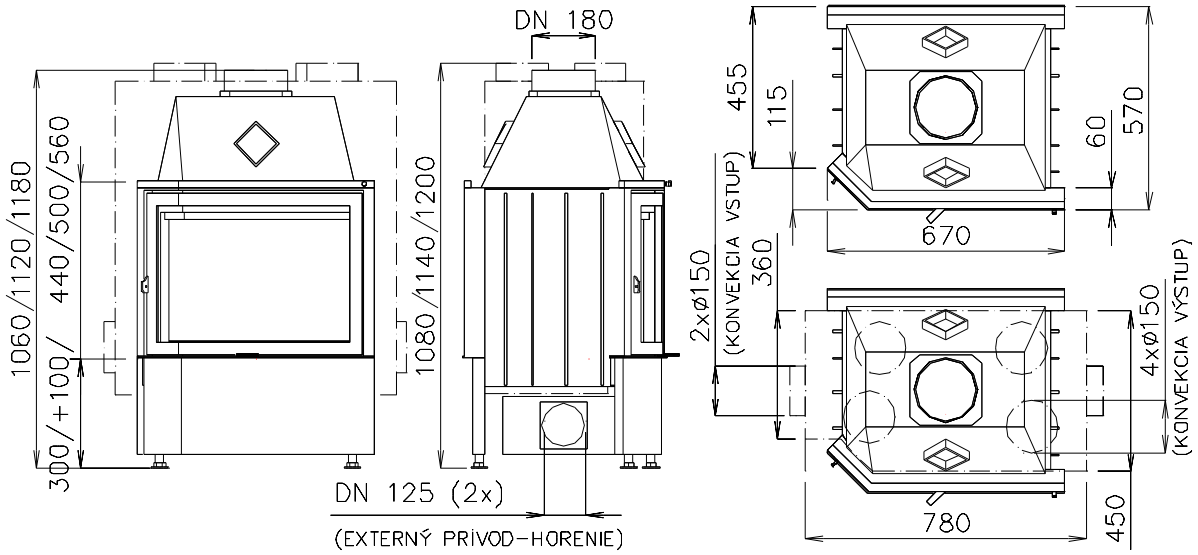

- Vertical Opening Door (VD): *CHOPOK/ĎUMBIER O R135 VD/420,480,540*

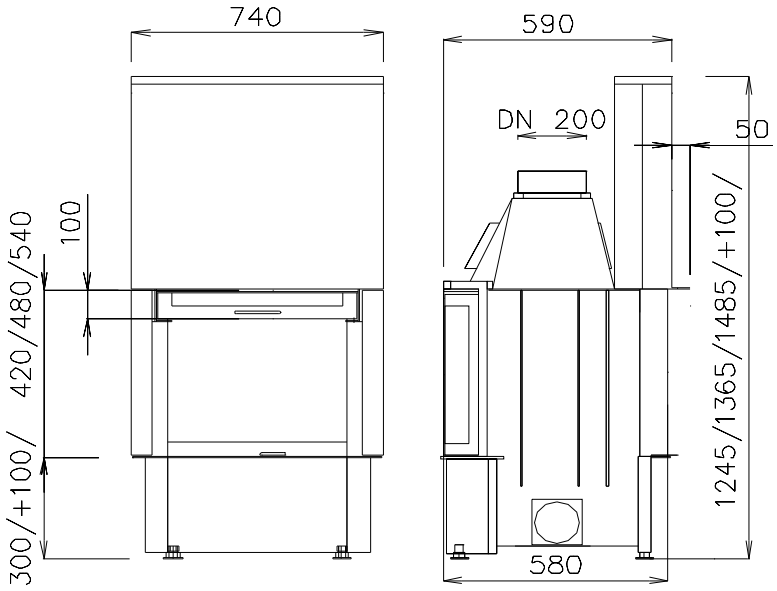

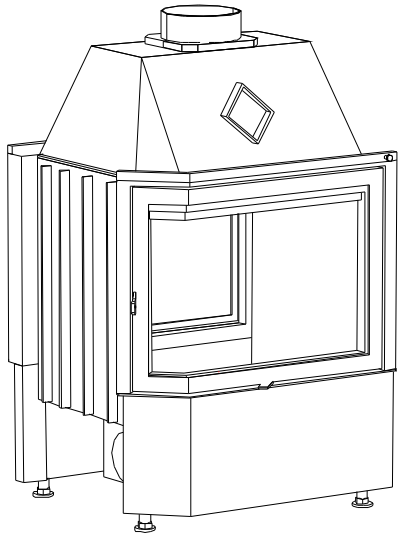

- Technical Data:

Type: CHOPOK/ĎUMBIER O R135 670/440,500,560

Average heat output:	9 kW
Operating heat power:	3-11 kW
Flue gas mass flow:	20 g/s
Flue gas temperature:	280 °C
Emission of CO to 13 % O2:	0,10%
Pressure required:	12 Pa
Weight: CH/D O R135 670/440/500/560	190/200/210 kg
CH/D O R135 VD 740/420/480/540	210/230/240 kg

Technical Sheet

CHOPOK/ĎUMBIER O R 135 780/500,560

Range 780

- Basic Model: **CHOPOK/ĎUMBIER O R135 780/500,560**
- Convection Casing (DP):*CHOPOK/ĎUMBIER O R135 780/500,560-DP*

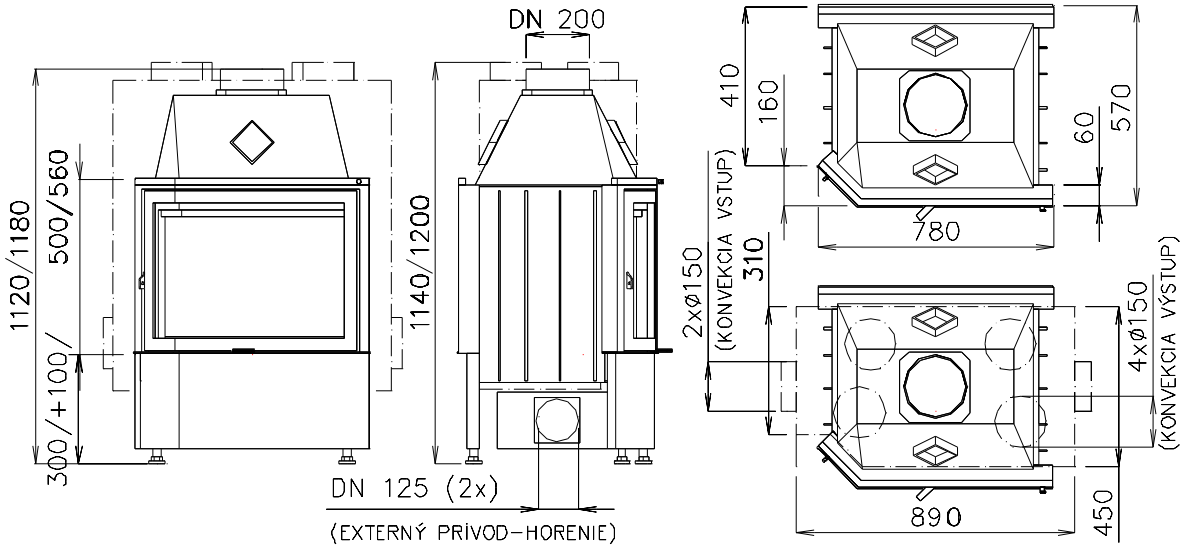

- Vertical Opening Door (VD): *CHOPOK/ĎUMBIER O R135 VD 850/480,540*

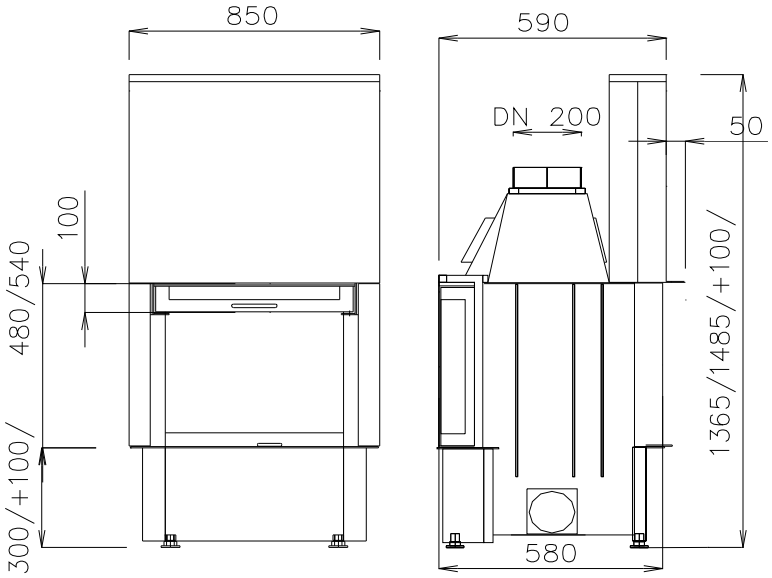

- Technical Data:

Type:	CHOPOK/ĎUMBIER O R135 780/500,560
Average heat output:	10 kW
Operating heat power:	3-12,5 kW
Flue gas mass flow:	20 g/s
Flue gas temperature:	320 °C
Emission of CO to 13 % O2:	0,10%
Pressure required:	12 Pa
Weight: CH/Ď O R135 780/500/560	230/240 kg
CH/Ď O R135 VD 850/480/540	265/275 kg

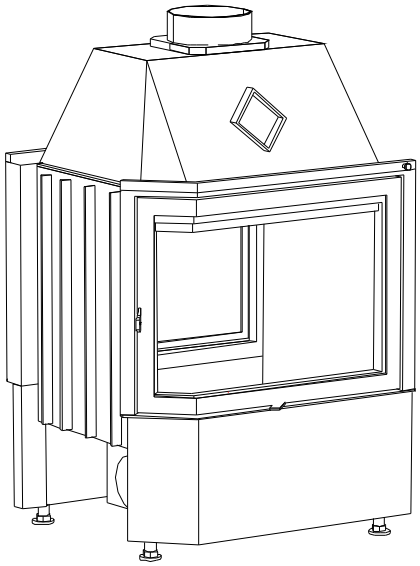

Technical Sheet

CHOPOK/ĎUMBIER O 550/440,500,560

Range 550

- Basic Model: **CHOPOK/ĎUMBIER O 550/440,500,560**
- Convection Casing (DP):*CHOPOK/ĎUMBIER O 550/440,500,560-DP*

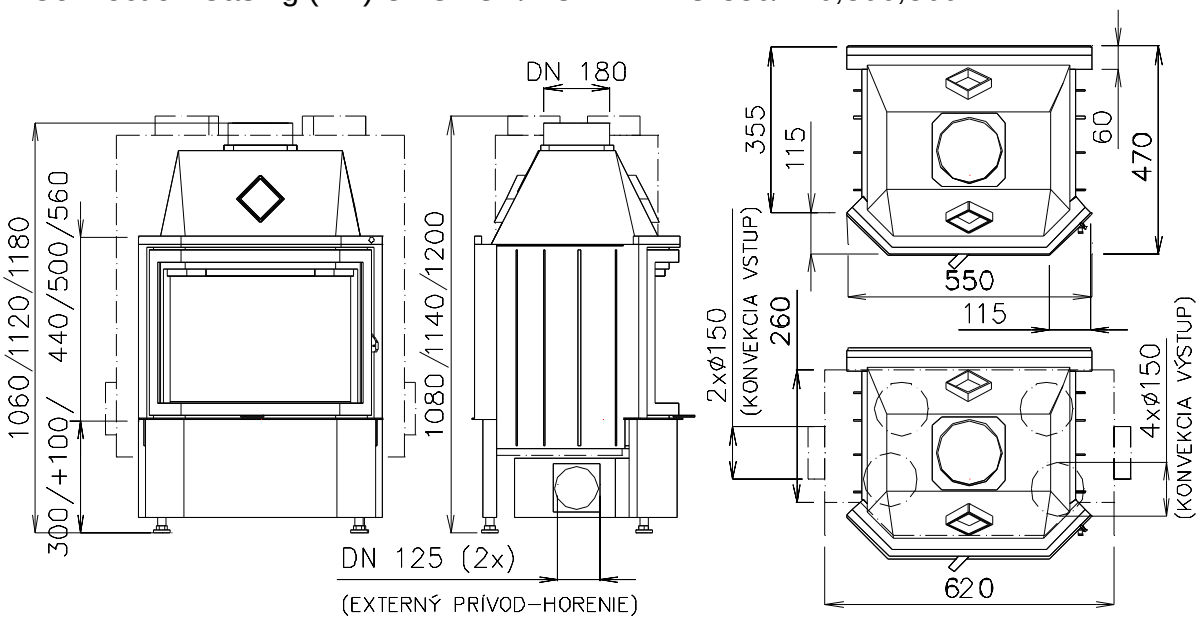

- Vertical Opening Door (VD): *CHOPOK/ĎUMBIER O R135 VD 620/420,480,540*

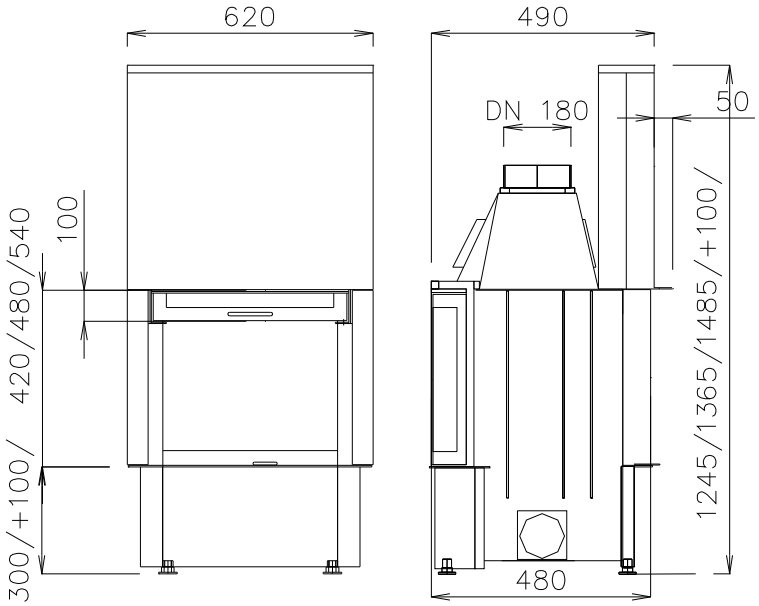

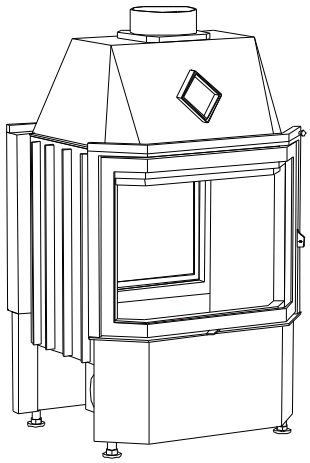

- Technical Data:

Type:	CHOPOK/ĎUMBIER O 550/440,500,560
Average heat output:	8 kW
Operating heat power:	2-10 kW
Flue gas mass flow:	12 g/s
Flue gas temperature:	240 °C
Emission of CO to 13 % O2:	0,12%
Pressure required:	12 Pa
Weight: CH/D O 550/440/500/560	135/140/145 kg
CH/D O VD 620/420/480/540	155/160/165 kg

Technical Sheet

CHOPOK/ĎUMBIER O 600/440,500,560

Range 600

- Basic Model: **CHOPOK/ĎUMBIER O 600/440,500,560**
- Convection Casing (DP):*CHOPOK/ĎUMBIER O 600/440,500,560-DP*

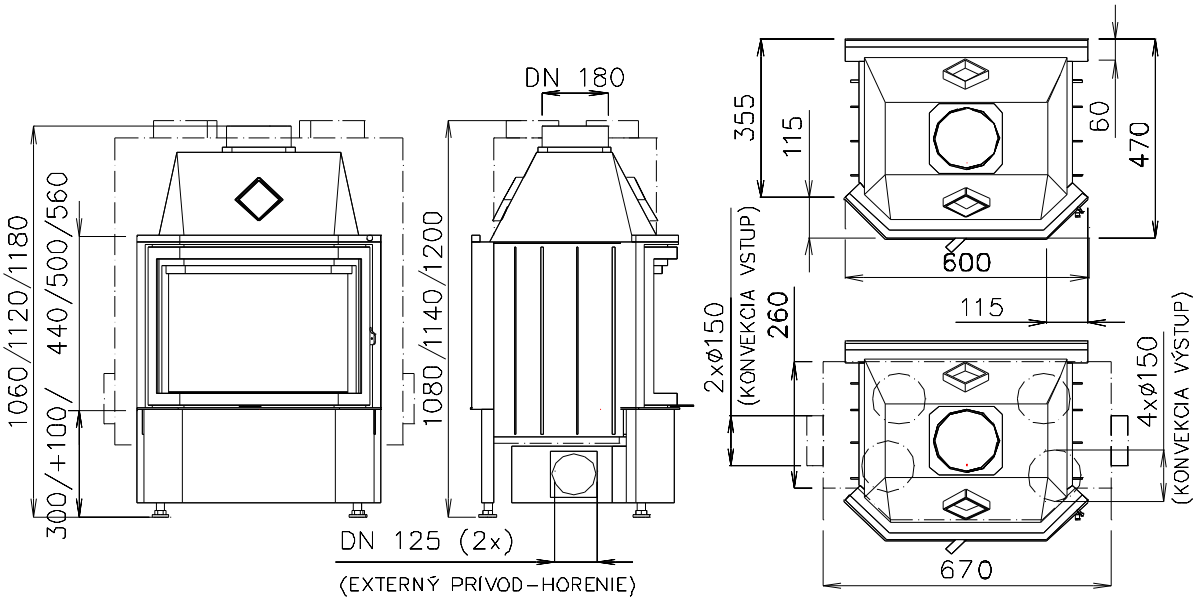

- Vertical Opening Door (VD): *CHOPOK/ĎUMBIER O VD 670/420,480,540*

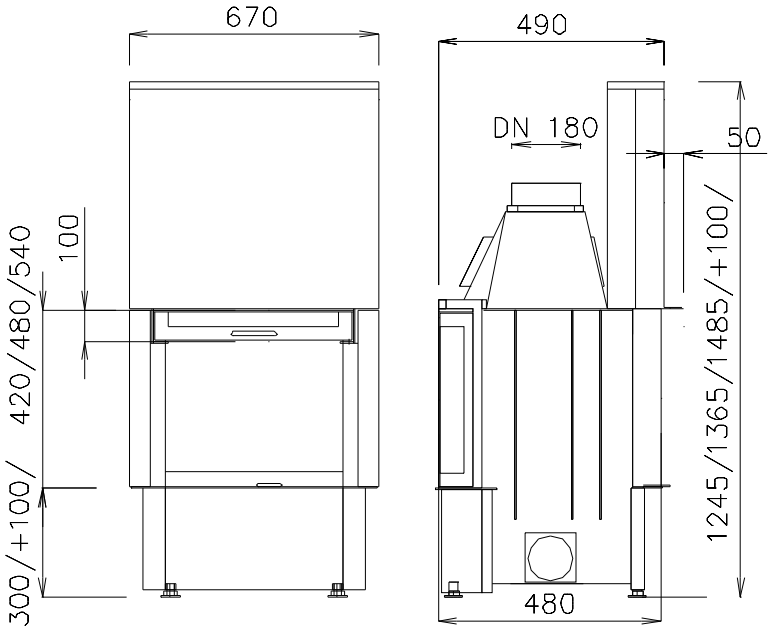

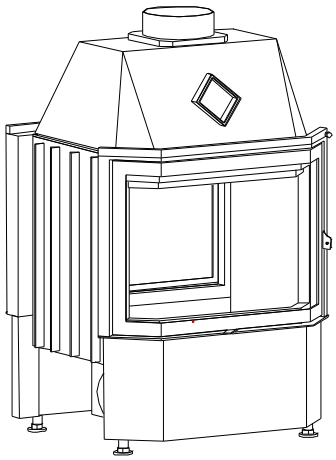

- Technical Data:

Type:	CHOPOK/ĎUMBIER O 600/440,500,560
Average heat output:	8,5 kW
Operating heat power:	2,5-10,5 kW
Flue gas mass flow:	15 g/s
Flue gas temperature:	250 °C
Emission of CO to 13 % O2:	0,12%
Pressure required:	12 Pa
Weight: CH/Ď O 600/440/500/560	155/160/165 kg
CH/Ď O VD 670/420/480/540	180/185/190 kg

Technical Sheet

CHOPOK/ĎUMBIER O 670/440,500,560

Range 670

- Basic Model: **CHOPOK/ĎUMBIER O 670/440,500,560**
- Convection Casing (DP):*CHOPOK/ĎUMBIER O 670/440,500,560-DP*

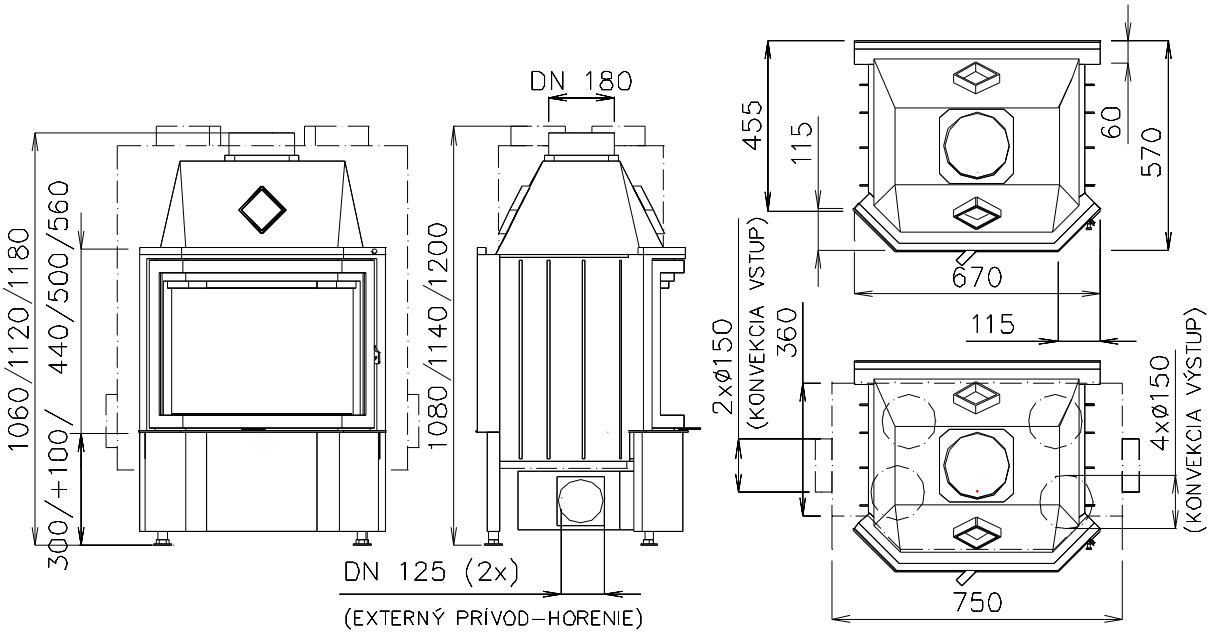

- Vertical Opening Door (VD): *CHOPOK/ĎUMBIER O VD 740/420,480,540*

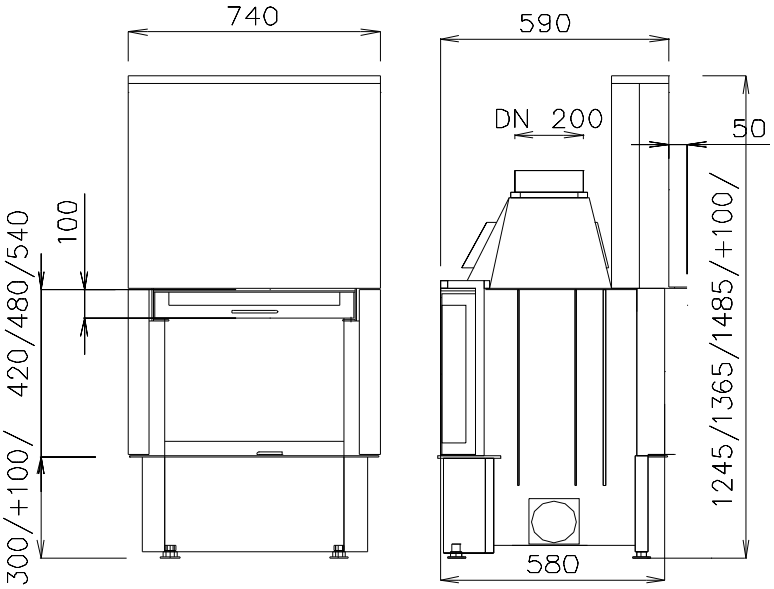

- Technical Data:

Type:	CHOPOK/ĎUMBIER O 670/440,500,560
Average heat output:	9 kW
Operating heat power:	3-11 kW
Flue gas mass flow:	20 g/s
Flue gas temperature:	2860°C
Emission of CO to 13 % O2:	0,10%
Pressure required:	12 Pa
Weight: CH/D O 670/440/500/560	190/200/210 kg
CH/D O VD 740/420/480/540	210/230/240 kg

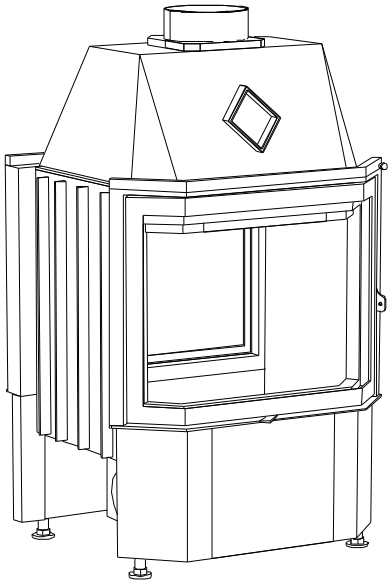

Technical Sheet

CHOPOK/ĎUMBIER O 780/500,560

Range 780

- Basic Model: **CHOPOK/ĎUMBIER O 780/500,560**
- Convection Casing (DP):*CHOPOK/ĎUMBIER O 780/500,560-DP*

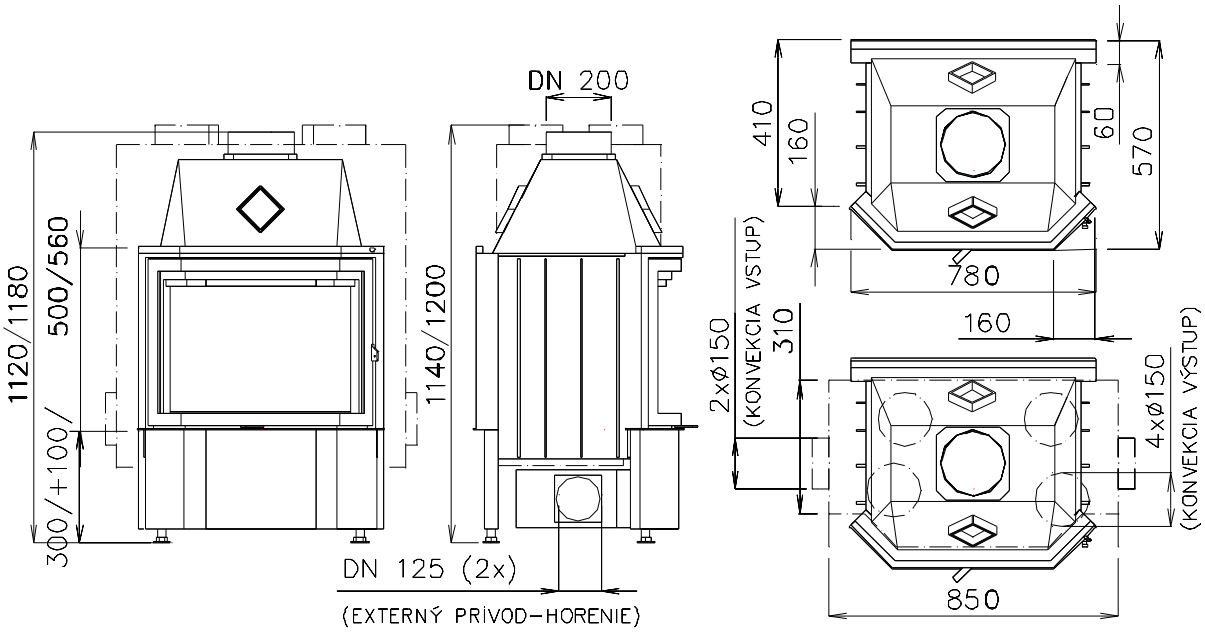

- Vertical Opening Door (VD): *CHOPOK/ĎUMBIER O VD 850/480,540*

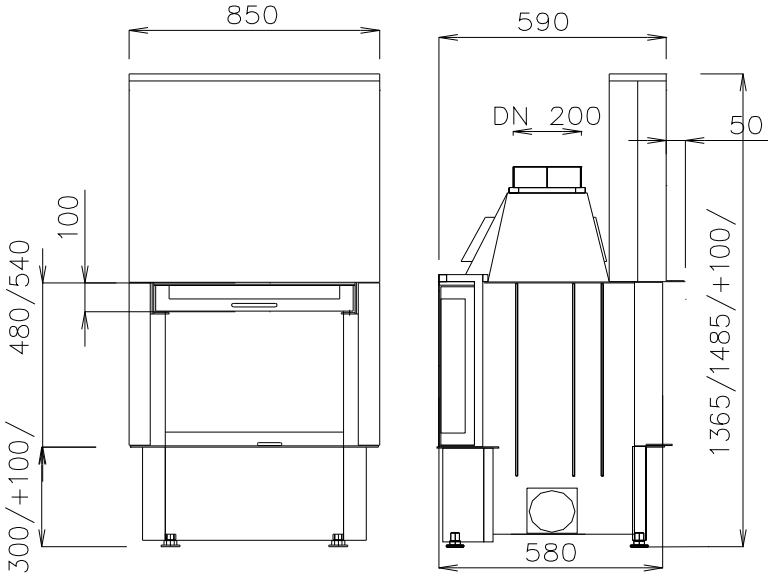

- Technical Data:

Type:	CHOPOK/ĎUMBIER O 780/500,560	
Average heat output:		10 kW
Operating heat power:		3-12,5 kW
Flue gas mass flow:		20 g/s
Flue gas temperature:		320 °C
Emission of CO to 13 % O2:		0,10%
Pressure required:		12 Pa
Weight:	CH/Ď O 780/500/560	230/240 kg
	CH/Ď O VD 850/480/540	265/275 kg

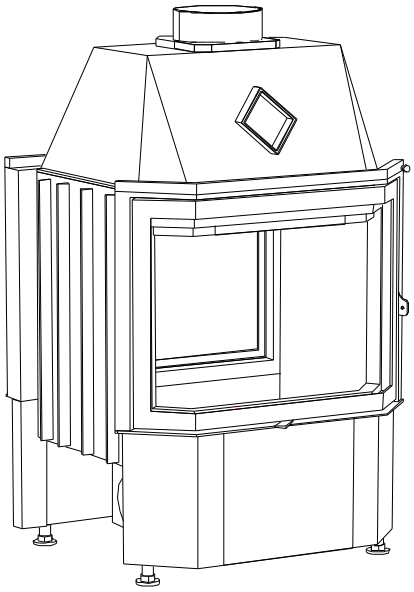

CHOPOK/MÝTO O 670/500 Range 670

- Basic Model: **CHOPOK/MÝTO O 670/500**
- Convection Casing (DP):*CHOPOK/MÝTO O 670/500-DP*

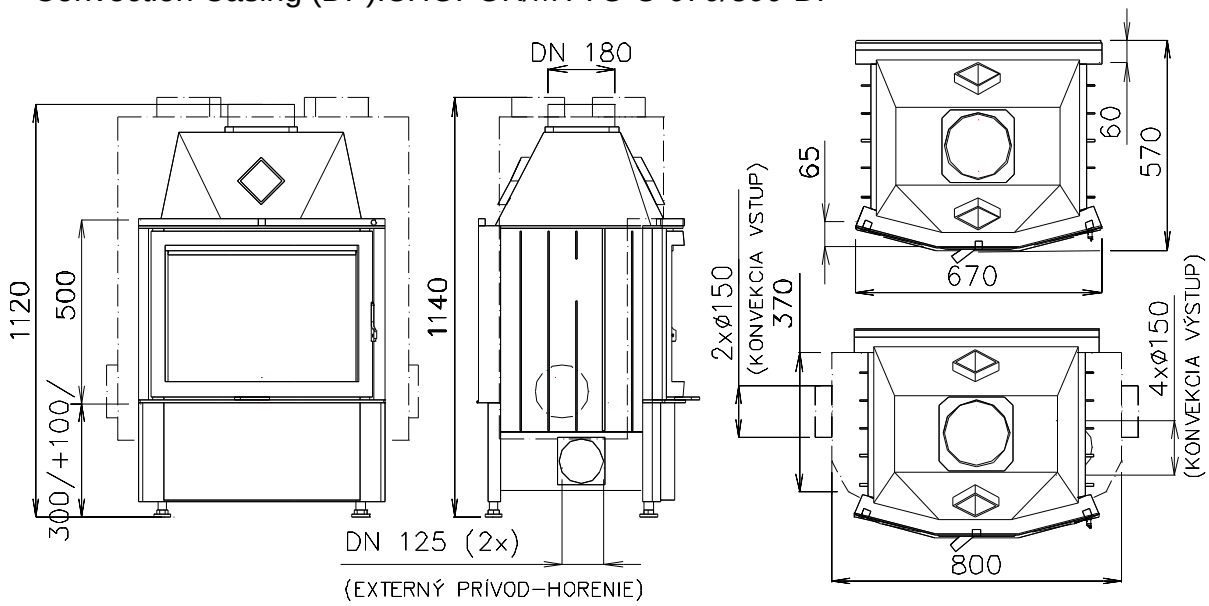

- Vertical Opening Door (VD): *CHOPOK/MÝTO O VD 740/480*

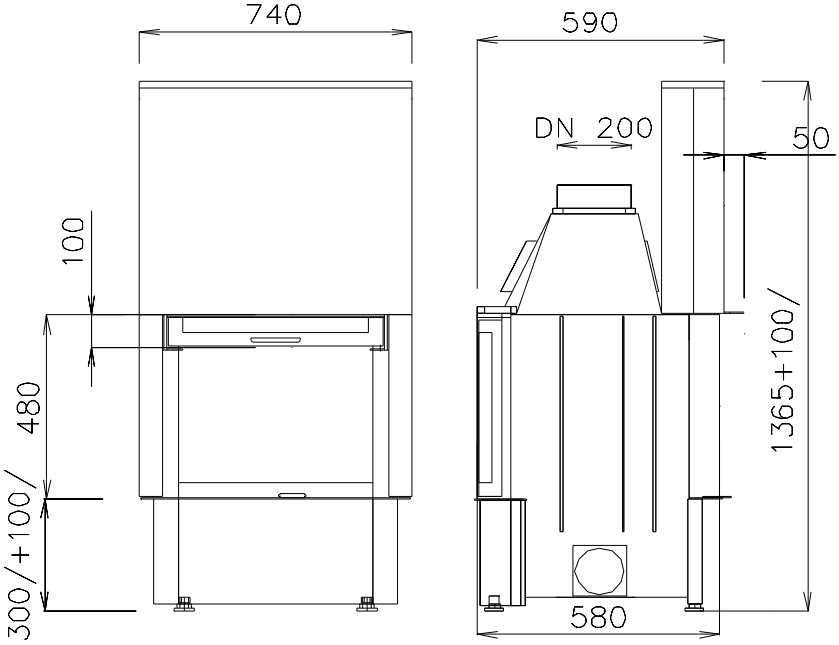

- Technical Data:

Type: CHOPOK/MÝTO O 670/500	
Average heat output:	9 kW
Operating heat power:	3-11 kW
Flue gas mass flow:	20 g/s
Flue gas temperature:	280 °C
Emission of CO to 13 % O2:	0,10%
Pressure required:	12 Pa
Weight: CH/M O 670/500	200 kg
CH/M O VD 740/480	230 kg

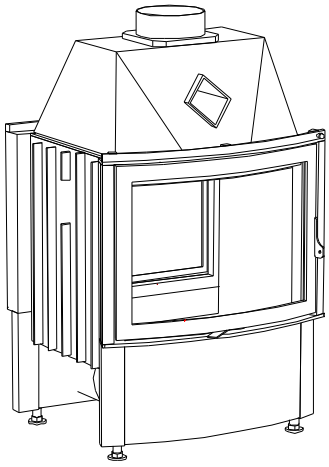

Technical Sheet

CHOPOK/MÝTO R900 O 780/560

Range 780

- Basic Model: **CHOPOK/MÝTO R900 O 780/560**
- Convection Casing (DP):*CHOPOK/MÝTO R900 O 780/560-DP*

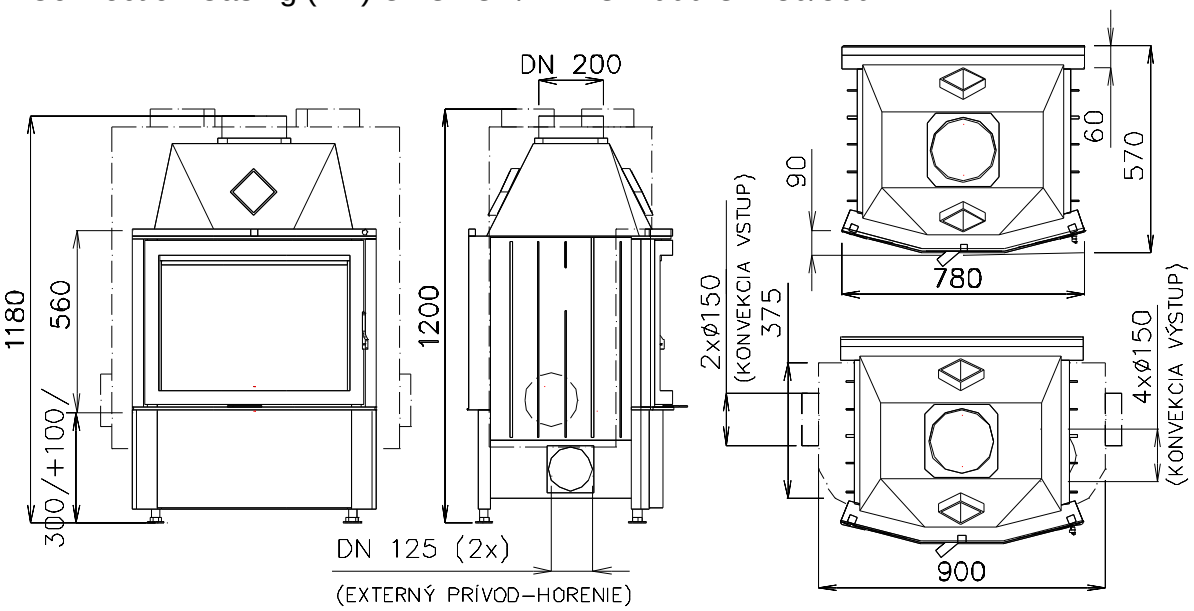

- Vertical Opening Door (VD): *CHOPOK/MÝTO R900 O VD 850/540*

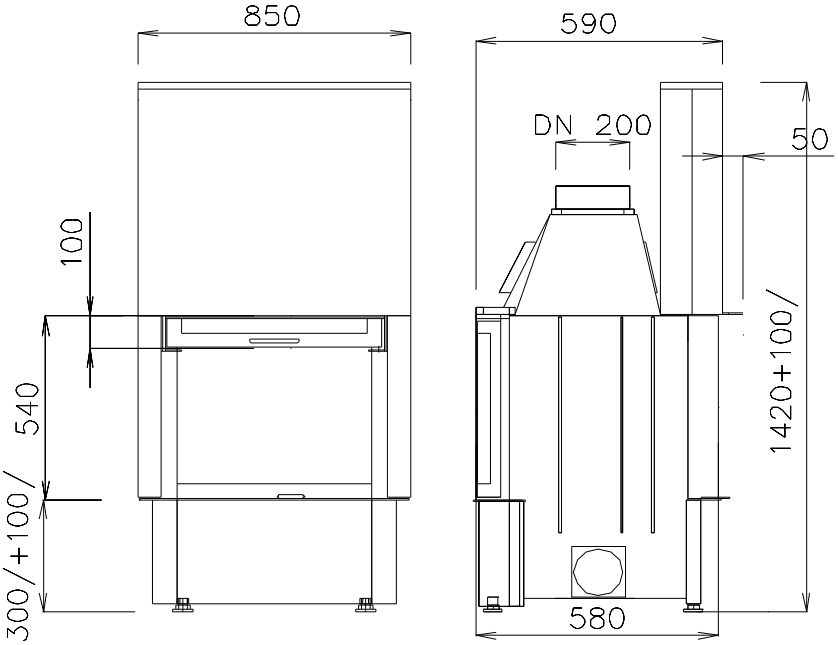

- Technical Data:

Type: CHOPOK/MÝTO R900 O 780/560	
Average heat output:	10 kW
Operating heat power:	3-12,5 kW
Flue gas mass flow:	20 g/s
Flue gas temperature:	320 °C
Emission of CO to 13 % O2:	0,10%
Pressure required:	12 Pa
Weight: CH/M R900 O 780/560	240 kg
CH/M R900 O VD 850/540	275 kg

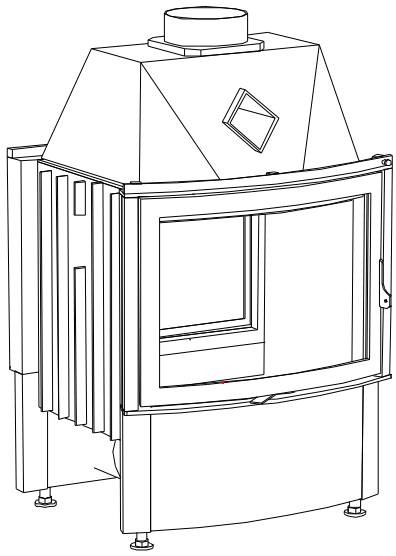

Technical Sheet

ĎUMBIER 550/440,500,560

Range 550

- Basic Model**: ĎUMBIER 550/440,500,560**
- Convection Casing (DP):*ĎUMBIER 550/440,500,560-DP*

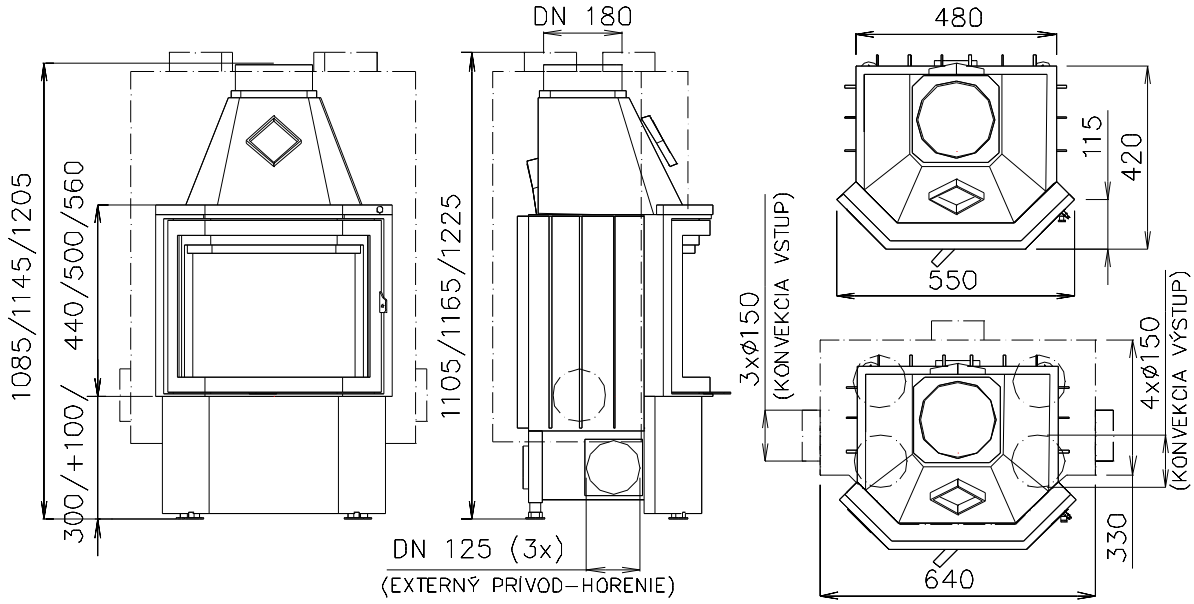

- Vertical Opening Door (VD): *ĎUMBIER VD 620/420,480,540*

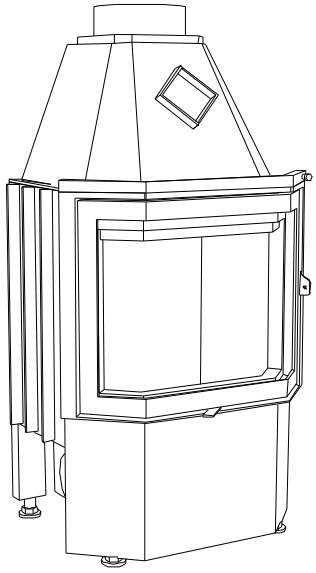

- Technical Data:

Type:	ĎUMBIER 550/440,500,560
Average heat output:	8 kW
Operating heat power:	2-10 kW
Flue gas mass flow:	12 g/s
Flue gas temperature:	240 °C
Emission of CO to 13 % O2:	0,12%
Pressure required:	12 Pa
Weight: D 550/440/500/560	150/155/160 kg
D VD 620/420/480/540	

ĎUMBIER 600/440,500,560

- Basic Model**: ĎUMBIER 600/440,500,560**
- Convection Casing (DP):*ĎUMBIER 600/440,500,560-DP*

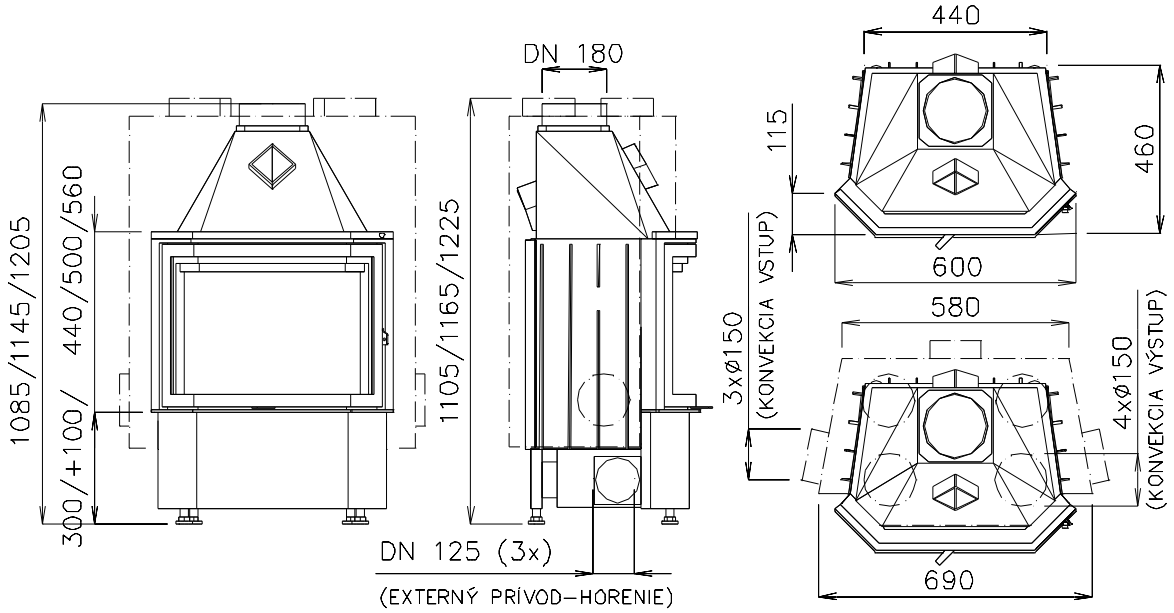

- Vertical Opening Door (VD): *ĎUMBIER VD 670/420,480,540*

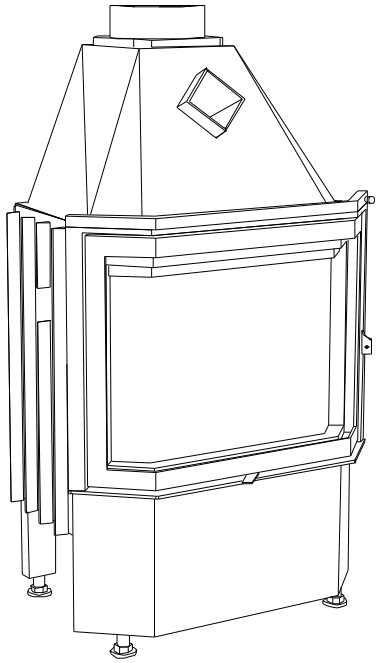

- Technical Data:

Type:	ĎUMBIER 600/440,500,560
Average heat output:	8,5 kW
Operating heat power:	2,5-10,5 kW
Flue gas mass flow:	15 g/s
Flue gas temperature:	250 °C
Emission of CO to 13 % O2:	0,12%
Pressure required:	12 Pa
Weight: D 600/440/500/560	150/160.165 kg
D VD 670/420/480/540	

Technical Sheet

ĎUMBIER 670/440,500,560

Range 670

- Basic Model: **ĎUMBIER 670/440,500,560**
- Convection Casing (DP):*ĎUMBIER 670/440,500,560-DP*

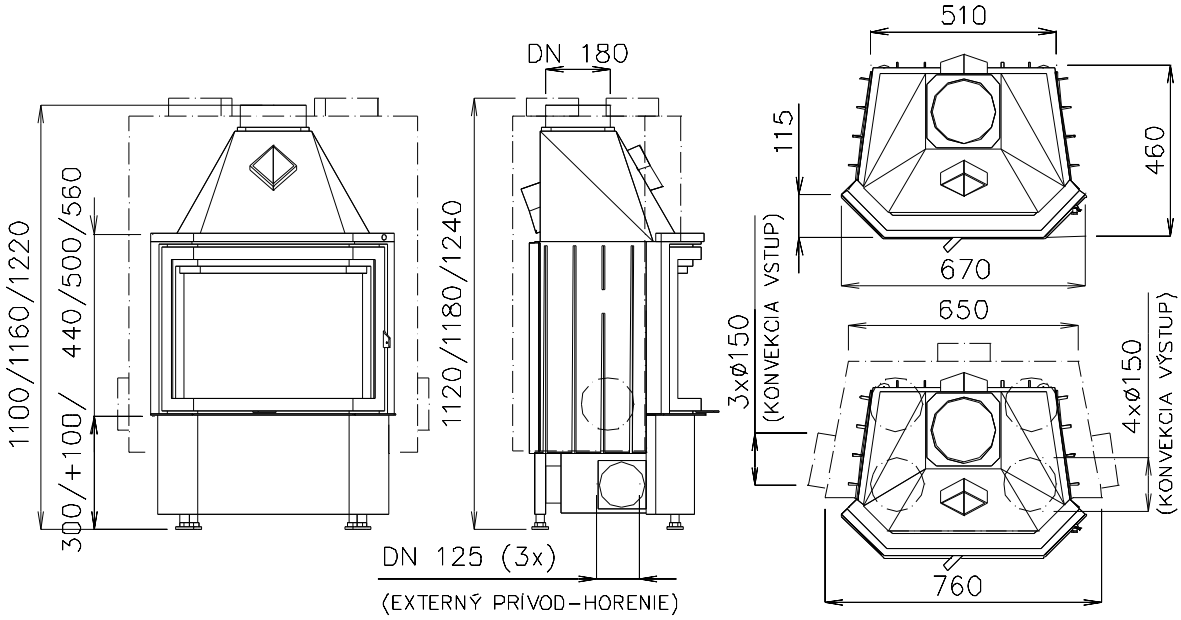

- Vertical Opening Door (VD): *ĎUMBIER VD 740/420,480,540*

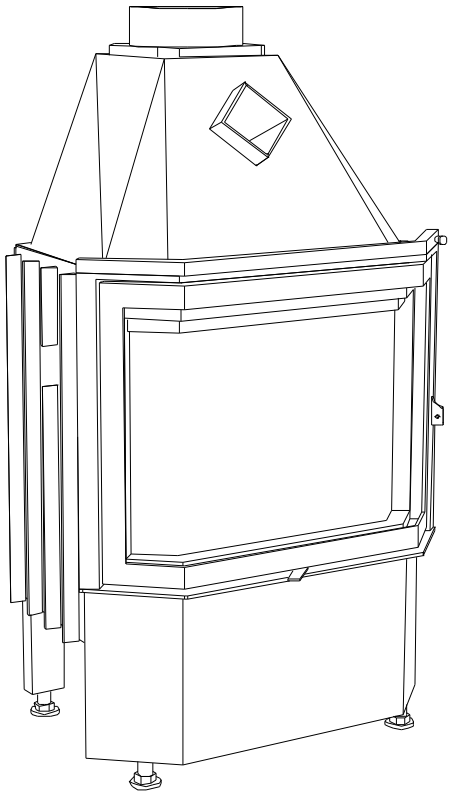

- Technical Data:

Type:	ĎUMBIER 670/440,500,560
Average heat output:	9 kW
Operating heat power:	3-11 kW
Flue gas mass flow:	20 g/s
Flue gas temperature:	280 °C
Emission of CO to 13 % O2:	0,10%
Pressure required:	12 Pa
Weight:D 670/440/500/560	160/170/180 kg
D VD 740/420/480/540	

Technical Sheet

ĎUMBIER 780/500,560

Range 780

- Basic Model: **ĎUMBIER 780/500,560**
- Convection Casing (DP):*ĎUMBIER 780/500,560-DP*

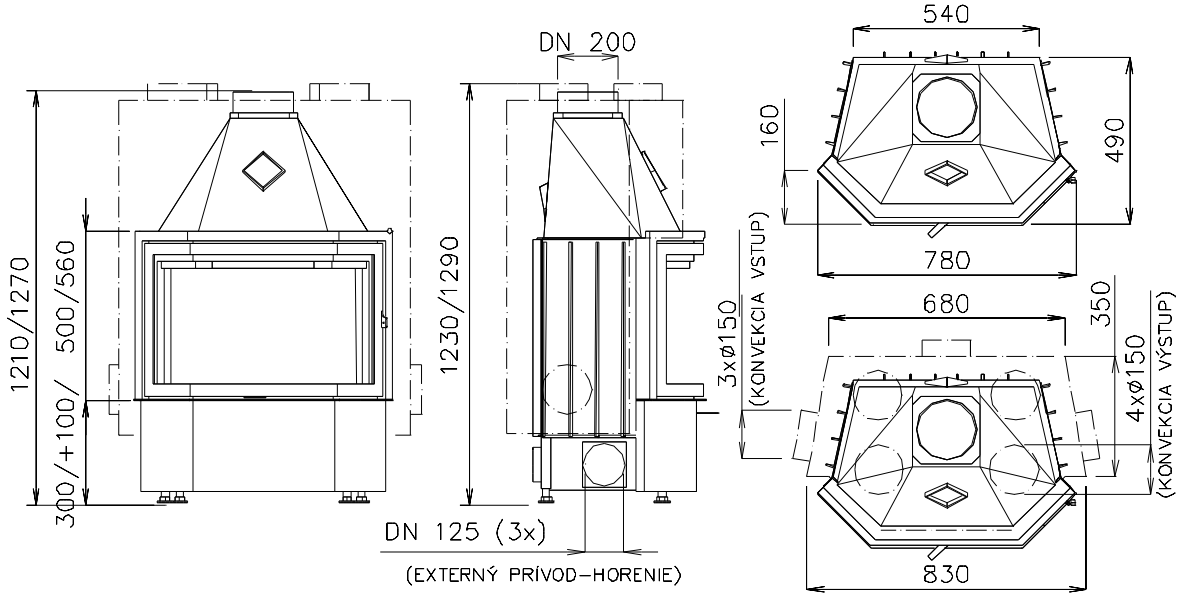

- Vertical Opening Door (VD): *ĎUMBIER VD 850/480,540*

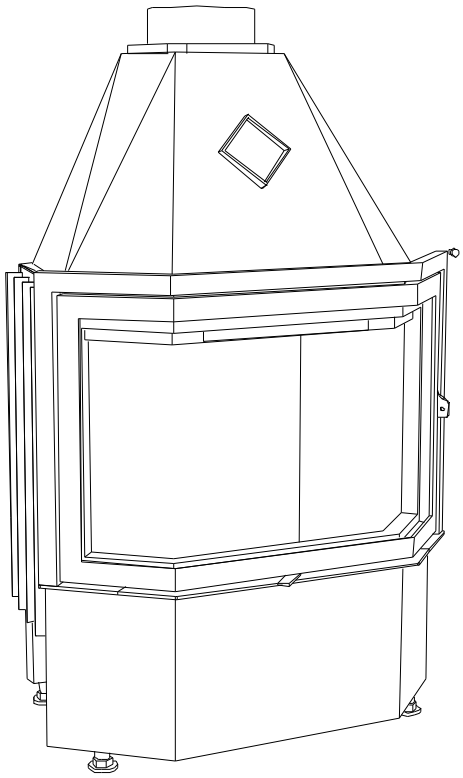

- Technical Data:

Type:	ĎUMBIER 780/500,560
Average heat output:	10 kW
Operating heat power:	3-12,5 kW
Flue gas mass flow:	20 g/s
Flue gas temperature:	320 °C
Emission of CO to 13 % O2:	0,10%
Pressure required:	12 Pa
Weight: D 780/500/560	195/205 kg
D VD 850/480/540	

Technical Sheet

ĎUMBIER R135 550/440,500,560

Range 550

- Basic Model: **ĎUMBIER R135 550/440,500,560**
- Convection Casing (DP):*ĎUMBIER R135 550/440,500,560-DP*

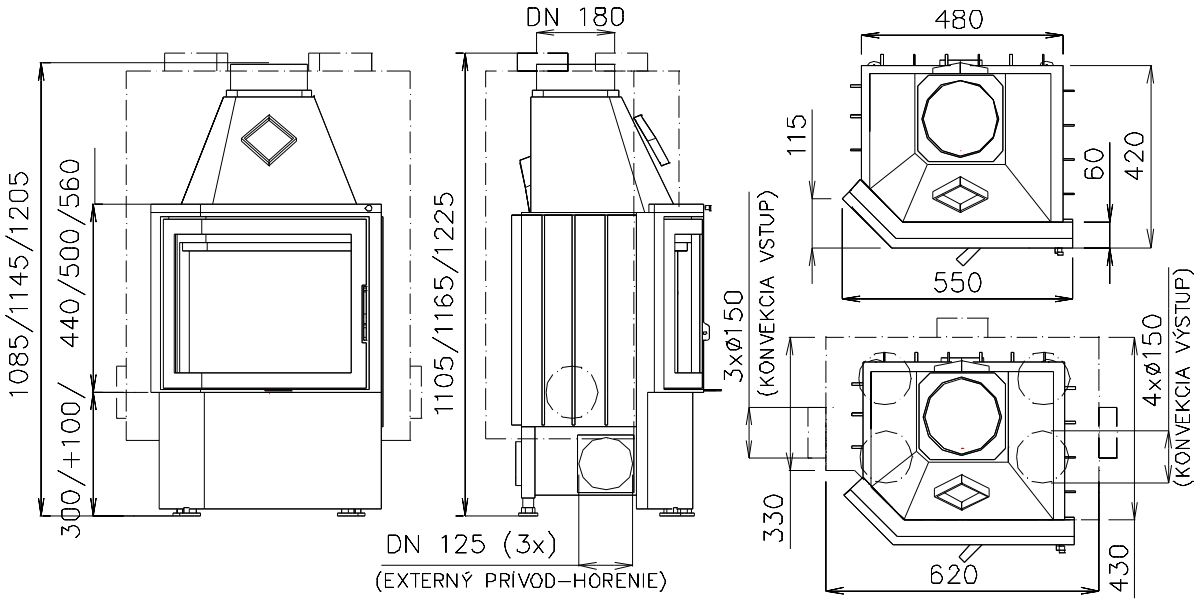

- Vertical Opening Door (VD*): ĎUMBIER R135 VD 620/420,480,540*

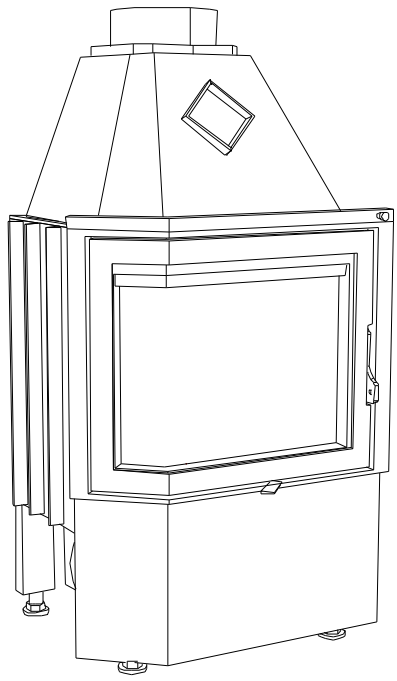

- Technical Data:

Type:	ĎUMBIER R135 550/440,500,560
Average heat output:	8 kW
Operating heat power:	2-10 kW
Flue gas mass flow:	12 g/s
Flue gas temperature:	240 °C
Emission of CO to 13 % O2:	0,12%
Pressure required:	12 Pa
Weight: D R135 550/440/500/560	150/155/160 kg
D R135 VD 620/420/480/540	

Technical Sheet

ĎUMBIER R135 600/440,500,560

Range 600

- Basic Model: **ĎUMBIER R135 600/440,500,560**
- Convection Casing (DP):*ĎUMBIER R135 600/440,500,560-DP*

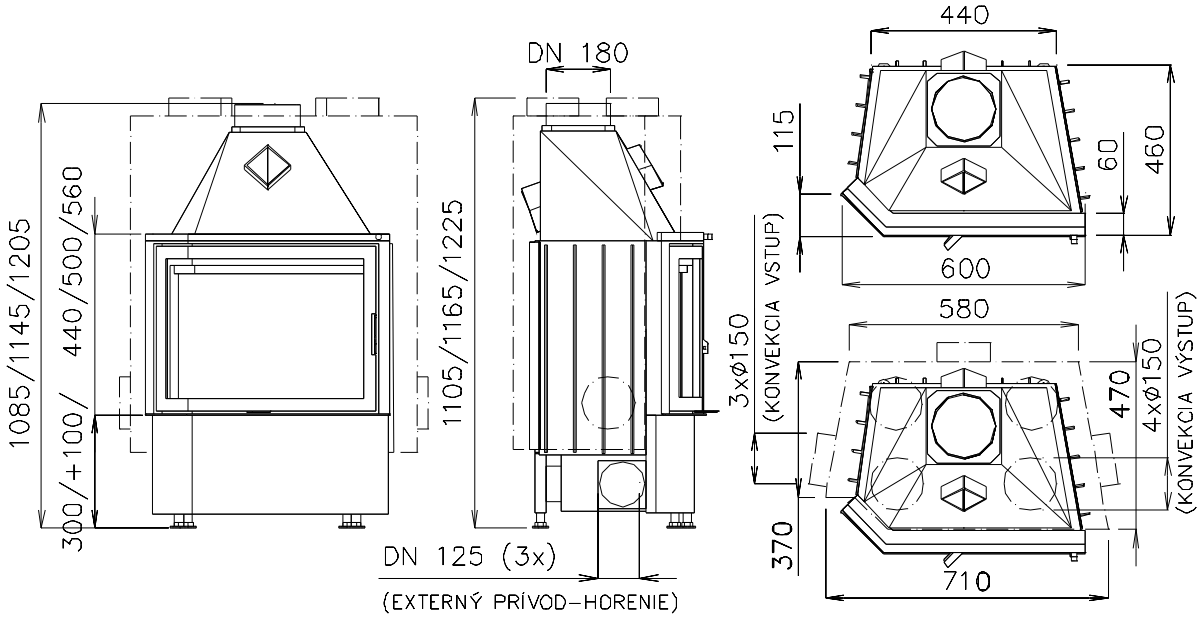

- Vertical Opening Door (VD): *ĎUMBIER R135 VD 670/420,480,540*

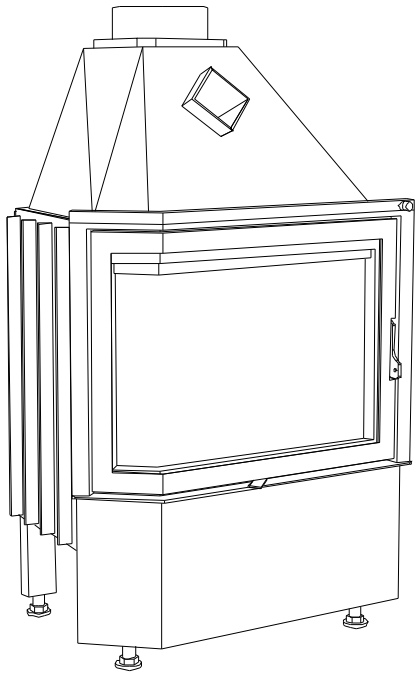

- Technical Data:

Type:	ĎUMBIER R135 600/440,500,560
Average heat output:	8,5 kW
Operating heat power:	2,5-10,5 kW
Flue gas mass flow:	15 g/s
Flue gas temperature:	250 ^{o}C
Emission of CO to 13 % O2:	0,12%
Pressure required:	12 Pa
Weight:	D R135 600/440/500/560 150/160/165kg
	D R135 VD 670/420/480/540

Technical Sheet

ĎUMBIER R135 670/440,500,560

Range 670

- Basic Model: **ĎUMBIER R135 670/440,500,560**
- Convection Casing (DP):*ĎUMBIER R135 670/440,500,560-DP*

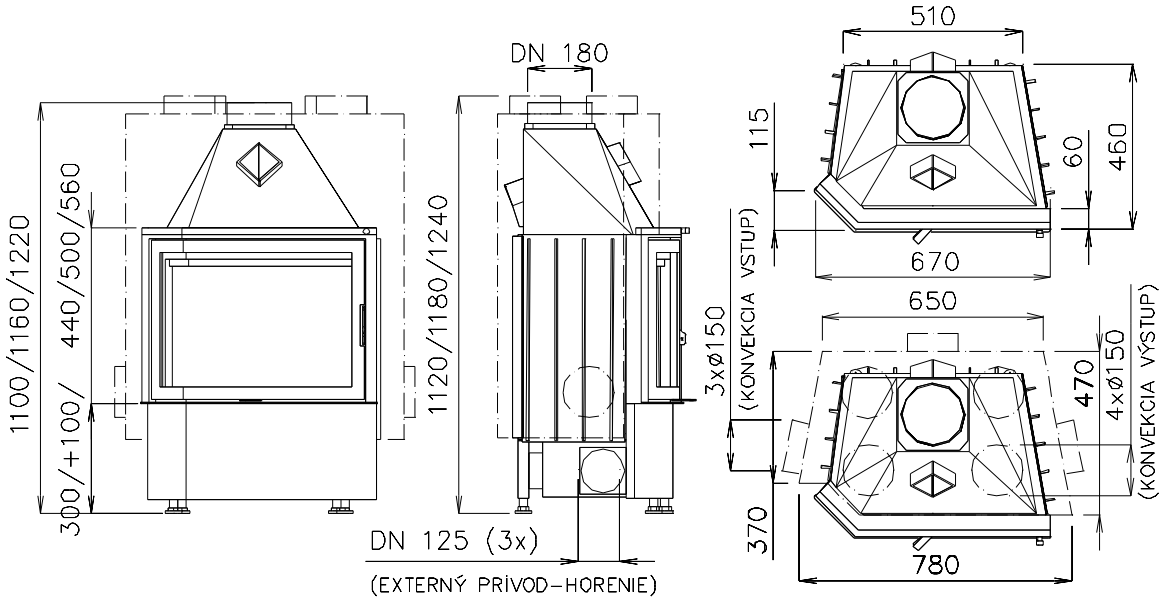

- Vertical Opening Door (VD): *ĎUMBIER R135 VD 740/420,480,540*

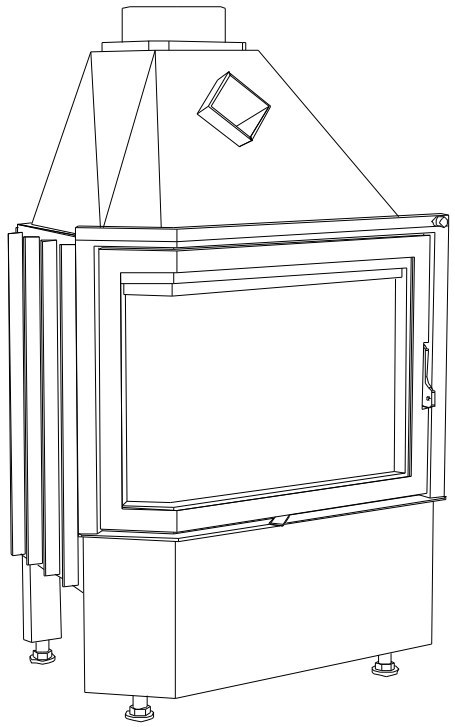

- Technical Data:

Type:
ĎUMBIER R135 670/440,500,560

Average heat output:	9 kW
Operating heat power:	3-11 kW
Flue gas mass flow:	20 g/s
Flue gas temperature:	280 ^{o}C
Emission of CO to 13 % O2:	0,10%
Pressure required:	12 Pa
Weight: D R135 670/440/500/560	160/170/180 kg
D R135 VD 740/420/480/540	

Technical Sheet

ĎUMBIER R135 780/500,560

Range 780

- Basic Model: **ĎUMBIER R135 780/500,560**
- Convection Casing (DP):*ĎUMBIER R135 780/500,560-DP*

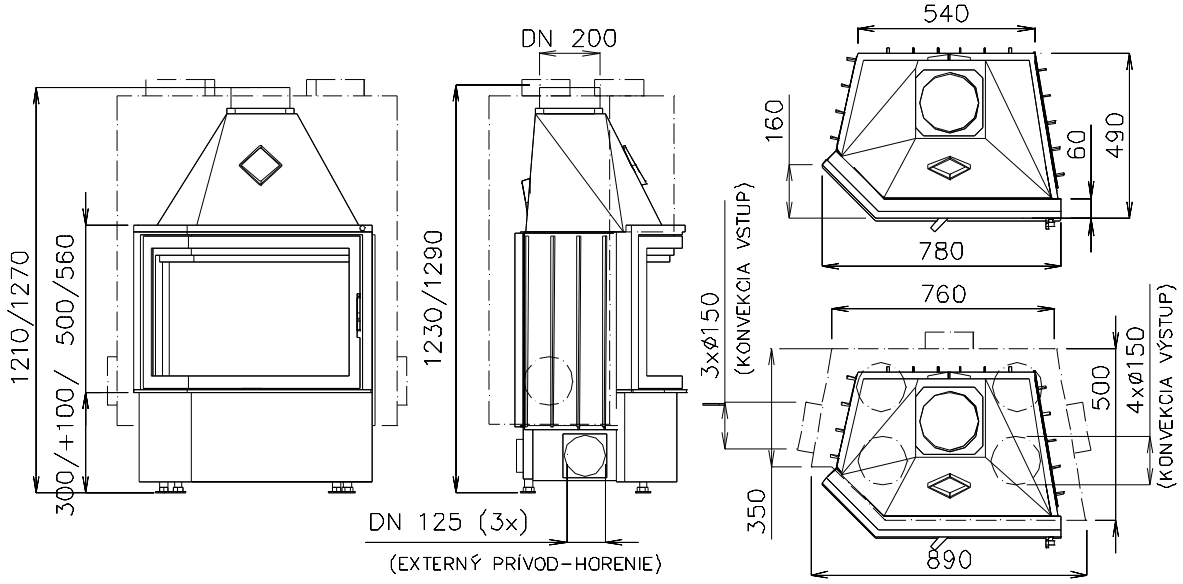

- Vertical Opening Door (VD): *ĎUMBIER R 135 VD 850/480,540*

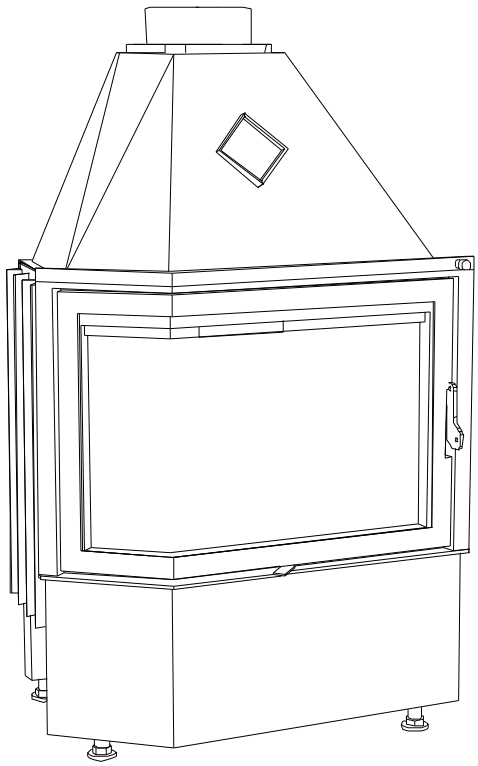

- Technical Data:

Type:	ĎUMBIER R135 780/500,560
Average heat output:	10 kW
Operating heat power:	3-12,5 kW
Flue gas mass flow:	20 g/s
Flue gas temperature:	320 °C
Emission of CO to 13 % O2:	0,10%
Pressure required:	12 Pa
Weight: D R135 780/500/560	190/205 kg
D R135 VD 780/480/540	

Technical Sheet

ĎUMBIER O 550/440,500,560

Range 550

- Basic Model: **ĎUMBIER O 550/440,500,560**
- Convection Casing (DP):*ĎUMBIER O 550/440,500,560-DP*

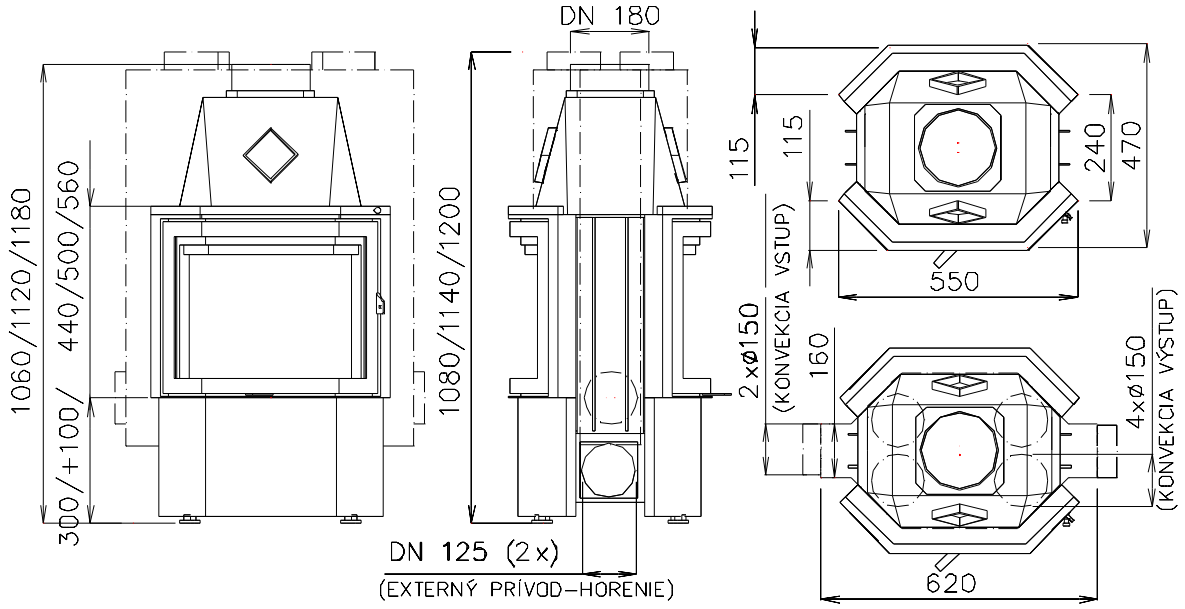

- Vertical Opening Door (VD): *ĎUMBIER O VD 620/420,480,540*

- Technical Data:

Type:	ĎUMBIER O 550/440,500,560
Average heat output:	8 kW
Operating heat power:	2-10 kW
Flue gas mass flow:	12 g/s
Flue gas temperature:	240 °C
Emission of CO to 13 % O2:	0,12%
Pressure required:	12 Pa
Weight: D O 550/440/500/560	130/135/140 kg
D O VD 620/420/480/540	

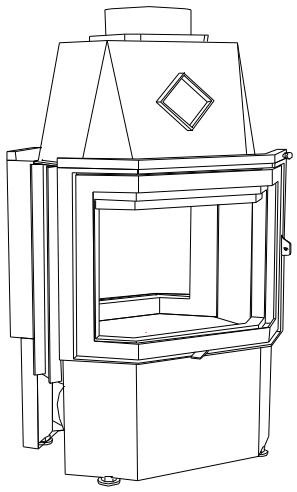

Technical Sheet

ĎUMBIER O 600/440,500,560

Range 600

- Basic Model: **ĎUMBIER O 600/440,500,560**
- Convection Casing (DP):*ĎUMBIER O 600/440,500,560-DP*

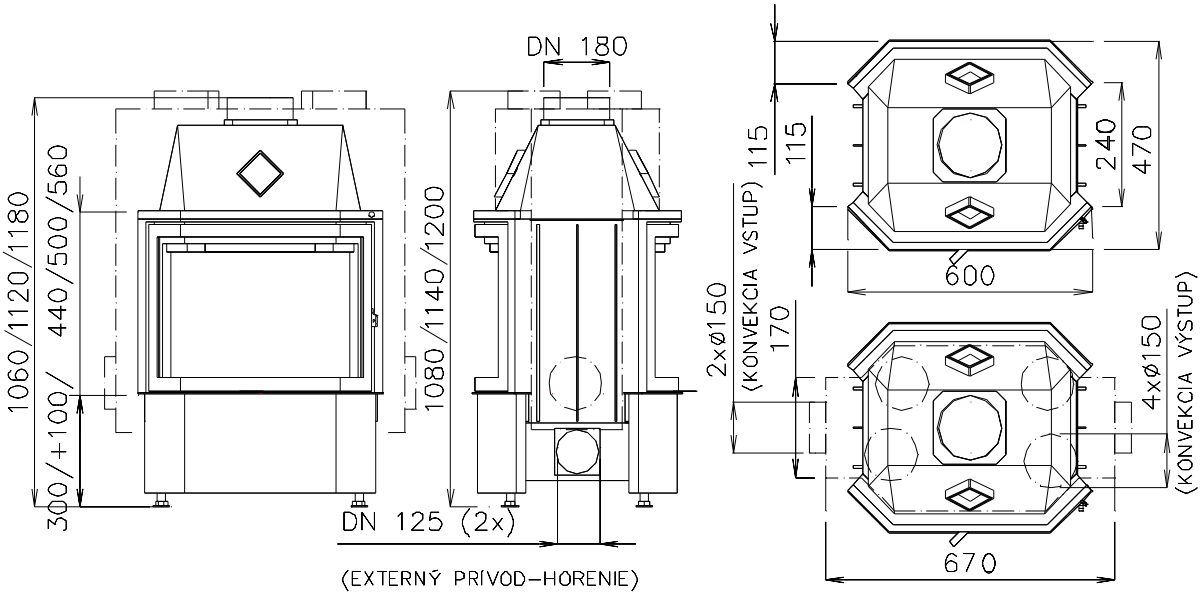

- Vertical Opening Door (VD): *ĎUMBIER O VD 670/420,480,540*

- Technical Data:

Type:	ĎUMBIER O 600/440,500,560
Average heat output:	8,5 kW
Operating heat power:	2,5-10,5 kW
Flue gas mass flow:	15 g/s
Flue gas temperature:	250 °C
Emission of CO to 13 % O2:	0,12%
Pressure required:	12 Pa
Weight: D O 600/440/500/560	140/145/150 kg
D O VD 670/420/480/540	

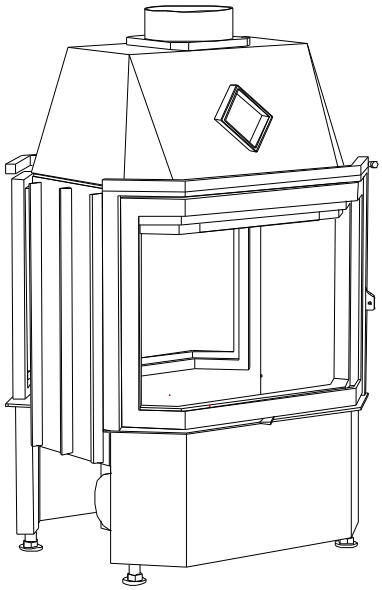

Technical Sheet

ĎUMBIER O 670/440,500,560

Range 670

- Basic Model: **ĎUMBIER O 670/440,500,560**
- Convection Casing (DP):*ĎUMBIER O 670/440,500,560-DP*

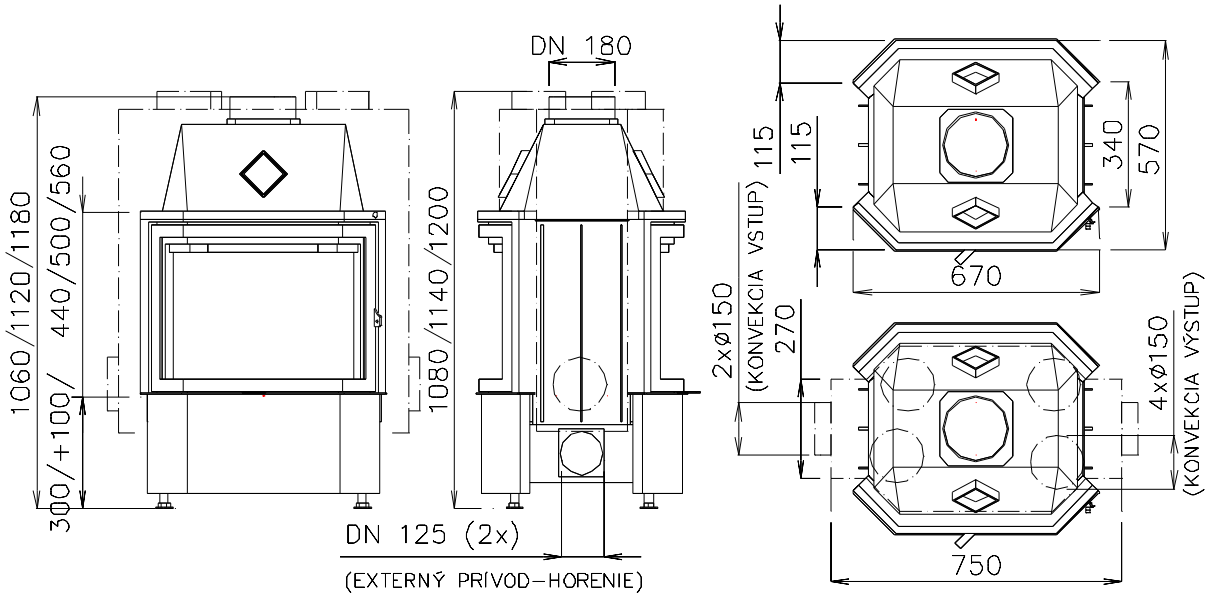

- Vertical Opening Door (VD): *ĎUMBIER O VD 740/420,480,540*

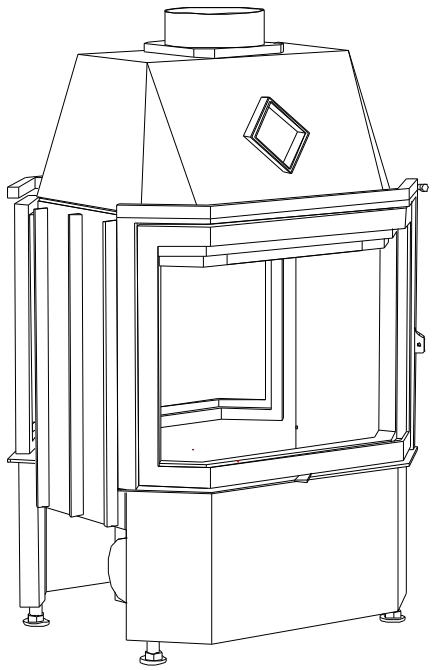

- Technical Data:

Type:	ĎUMBIER O 670/440,500,560
Average heat output:	9 kW
Operating heat power:	3-11 kW
Flue gas mass flow:	20 g/s
Flue gas temperature:	280 °C
Emission of CO to 13 % O2:	0,10%
Pressure required:	12 Pa
Weight: D O 670/440/500/560	150/160/170 kg
D O VD 740/420/480/540	

Technical Sheet

ĎUMBIER O 780/500,560

Range 780

- Basic Model**: ĎUMBIER O 780/500,560**
- Convection Casing (DP):*ĎUMBIER O 780/500,560-DP*

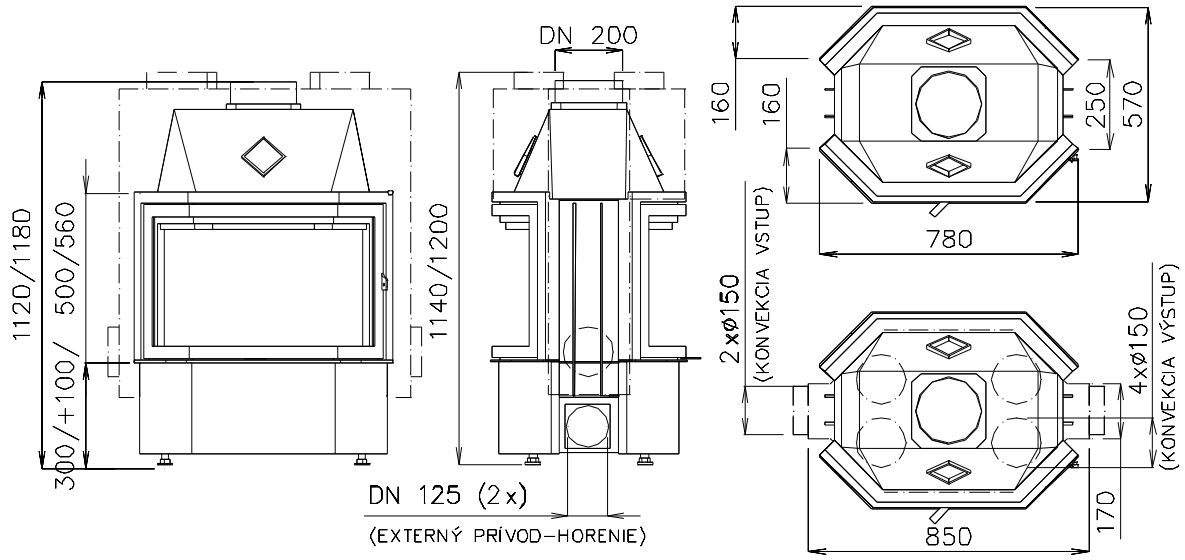

- Vertical Opening Door (VD): *ĎUMBIER VD O 850/480,540*

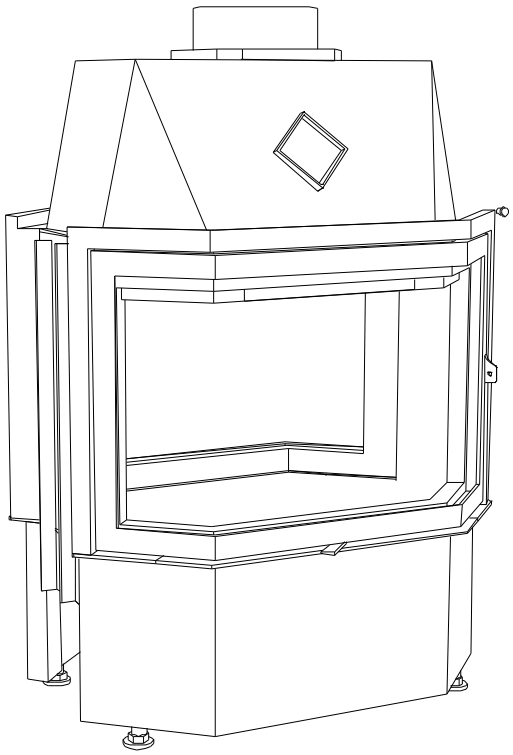

- Technical Data:

Type:	ĎUMBIER O 780/500,560
Average heat output:	10 kW
Operating heat power:	3-12,5 kW
Flue gas mass flow:	20 g/s
Flue gas temperature:	320 ^{o}C
Emission of CO to 13 % O2:	0,10%
Pressure required:	12 Pa
Weight: D O 780/500/560	180/190 kg
D O VD 850/480/540	

Technical Sheet

ĎUMBIER R135 O 550/440,500,560

Range 550

- Basic Model: **ĎUMBIER R135 O 550/440,500,560**
- Convection Casing (DP):*ĎUMBIER R135 O 550/440,500,560-DP*

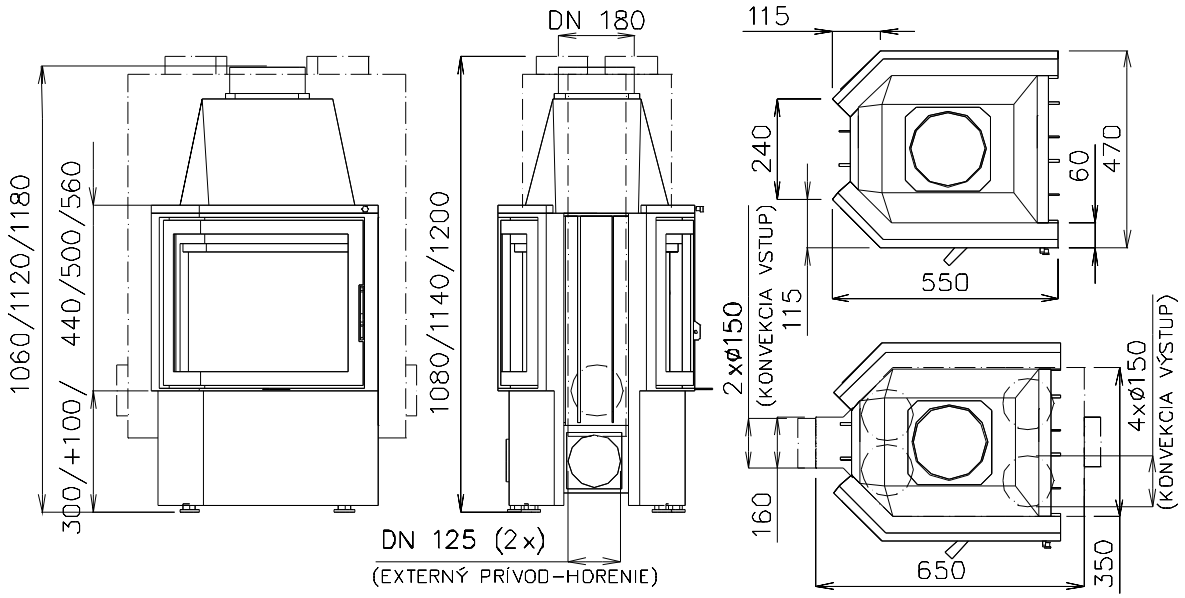

- Vertical Opening Door (VD): *ĎUMBIER R135 O VD 620/420,480,540*

- Technical Data:

Type:	ĎUMBIER R135 O 550/440,500,560
Average heat output:	8 kW
Operating heat power:	2-10 kW
Flue gas mass flow:	12 g/s
Flue gas temperature:	240 °C
Emission of CO to 13 % O2:	0,12%
Pressure required:	12 Pa
Weight: D R135 O 550/440/500/560	135/140/145 kg
D R135 O VD 620/420/480/540	

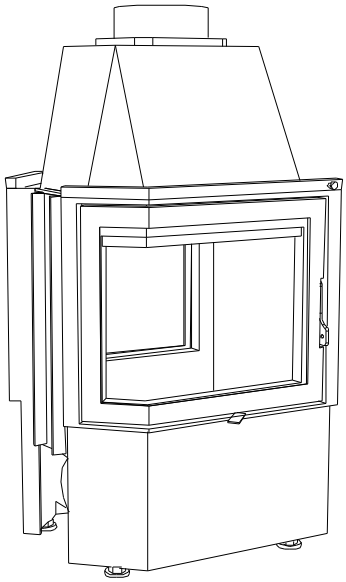

Technical Sheet

ĎUMBIER R135 O 600/440,500,560

Range 600

- Basic Model: **ĎUMBIER R135 O 600/440,500,560**
- Convection Casing (DP):*ĎUMBIER R135 O 600/440,500,560-DP*

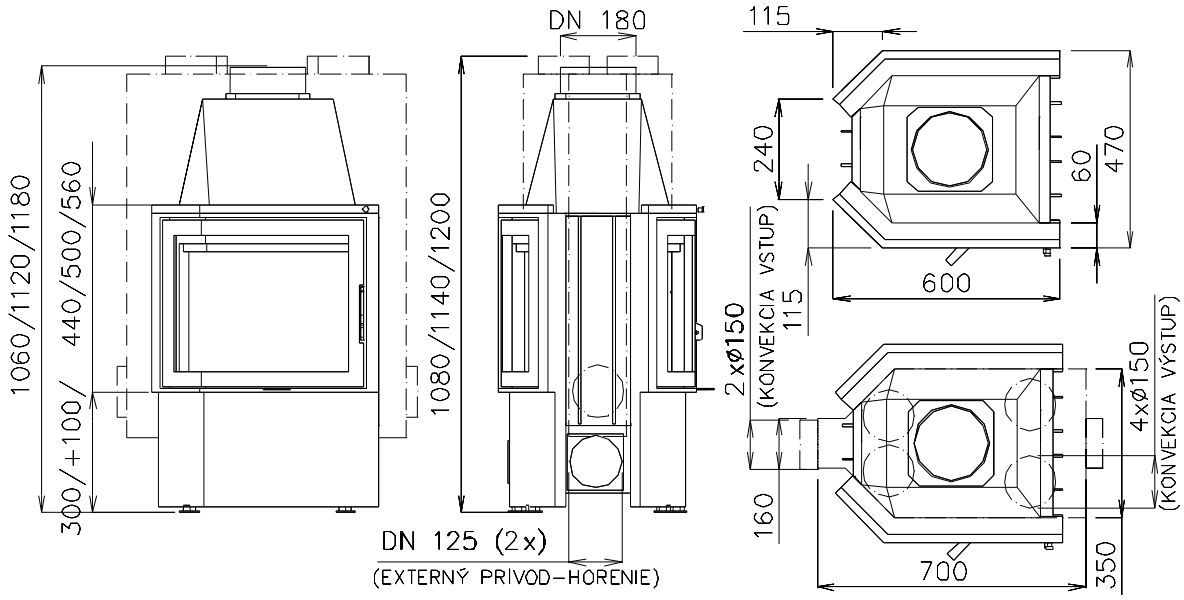

- Vertical Opening Door (VD): *ĎUMBIER R135 O VD 670/420,480,540*

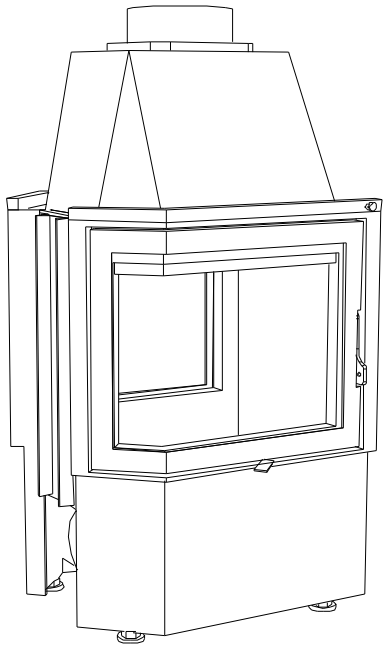

- Technical Data:

Type:	ĎUMBIER R135 O 600/440,500,560
Average heat output:	8,5 kW
Operating heat power:	2,5-10,5 kW
Flue gas mass flow:	15 g/s
Flue gas temperature:	250 °C
Emission of CO to 13 % O2:	0,12%
Pressure required:	12 Pa
Weight: D R135 O 600/440/500/560	145/150/155 kg
D R135 O VD 670/420/480/540	

Technical Sheet

ĎUMBIER R135 O 670/440,500,560

Range 670

- Basic Model: **ĎUMBIER R135 O 670/440,500,560**
- Convection Casing (DP):*ĎUMBIER R135 O 670/440,500,560-DP*

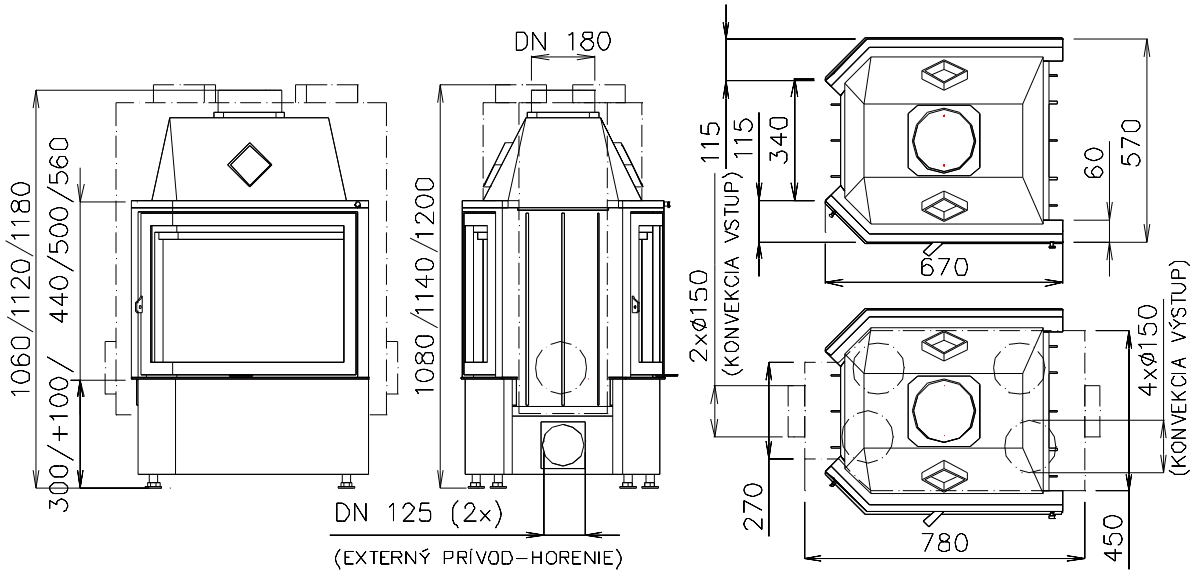

- Vertical Opening Door (VD): *ĎUMBIER R135 O VD 740/420,480,540*

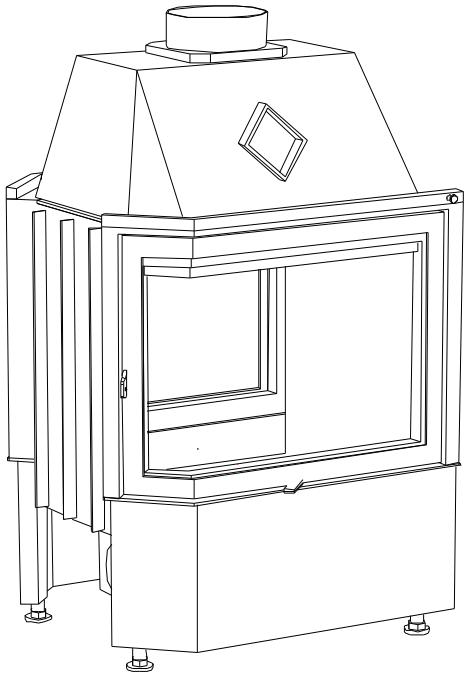

- Technical Data:

Type:	ĎUMBIER R135 O 670/440,500,560
Average heat output:	9 kW
Operating heat power:	3-11 kW
Flue gas mass flow:	20 g/s
Flue gas temperature:	280 °C
Emission of CO to 13 % O2:	0,10%
Pressure required:	12 Pa
Weight:	D R135 O 670/440/500/560 150/160/170 kg
	D R135 O VD 740/420/480/540

Technical Sheet

ĎUMBIER R135 O 780/500,560

Range 780

- Basic Model: **ĎUMBIER R135 O 780/500,560**
- Convection Casing (DP):*ĎUMBIER R135 O 780/500,560-DP*

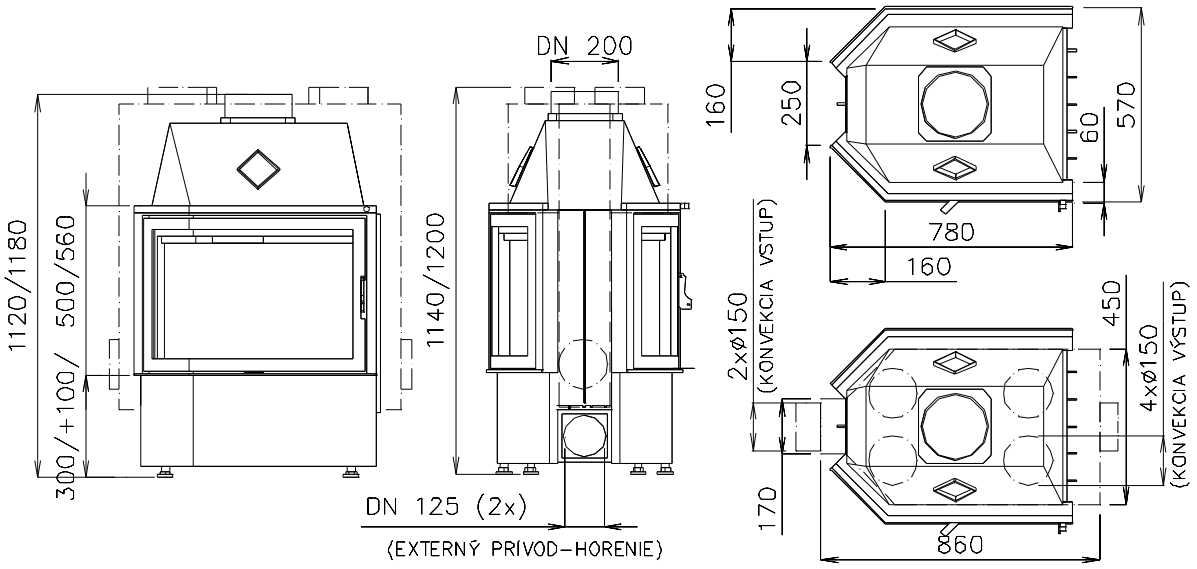

- Vertical Opening Door (VD): *ĎUMBIER VD R135 O 850/480,540*

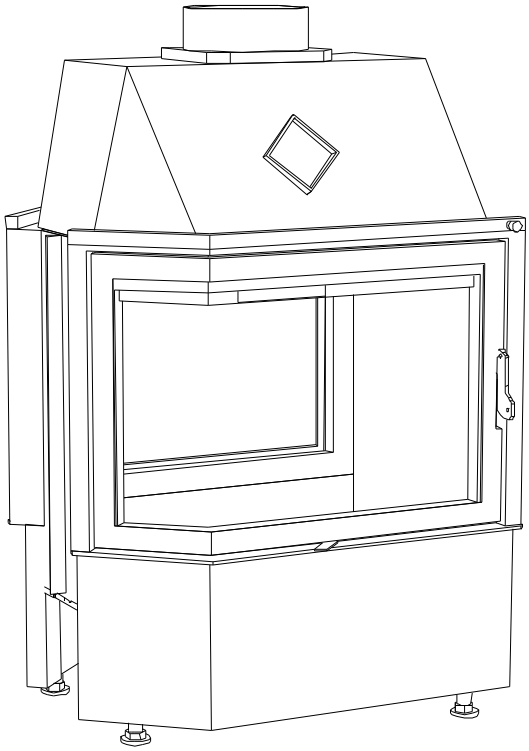

- Technical Data:

Type:	ĎUMBIER R135 O 780/500,560
Average heat output:	10 kW
Operating heat power:	3-12,5 kW
Flue gas mass flow:	20 g/s
Flue gas temperature:	320 °C
Emission of CO to 13 % O2:	0,10%
Pressure required:	12 Pa
Weight: D R135 O 780/500/560	185/195 kg
D R135 O VD 850/480/540	

Technical Sheet

MÝTO R550 670/500

Range 670

- Basic Model: **MÝTO R550 670/500**
- Convection Casing (DP):*MÝTO R550 670/500-DP*

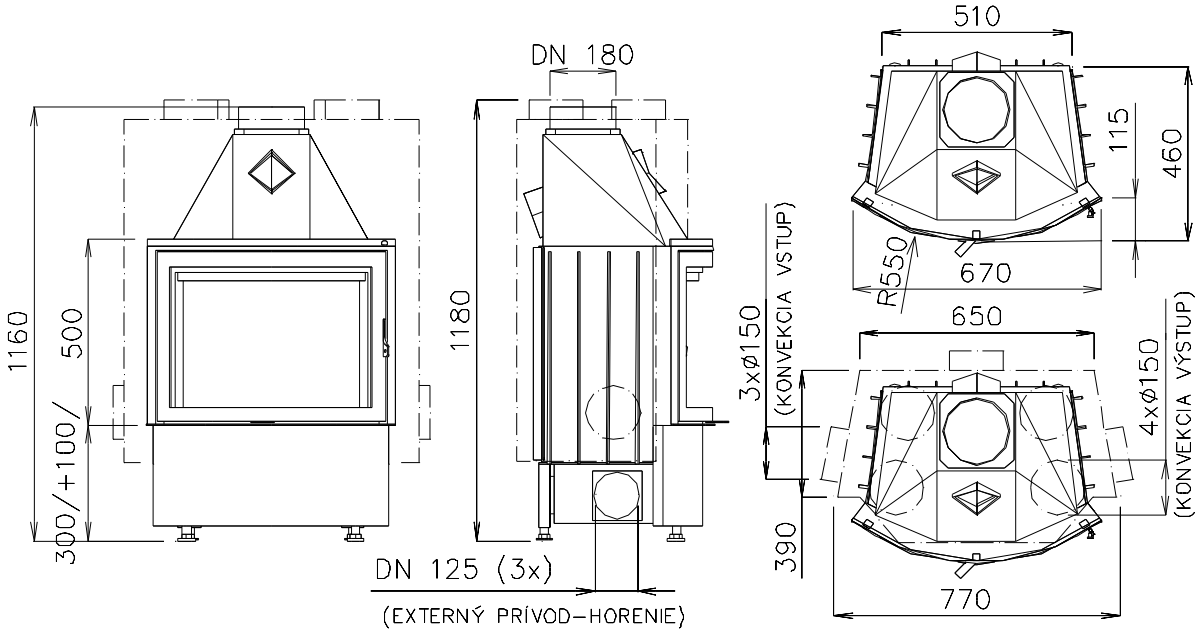

- Vertical Opening Door (VD): *MÝTO R550 VD 740/480*

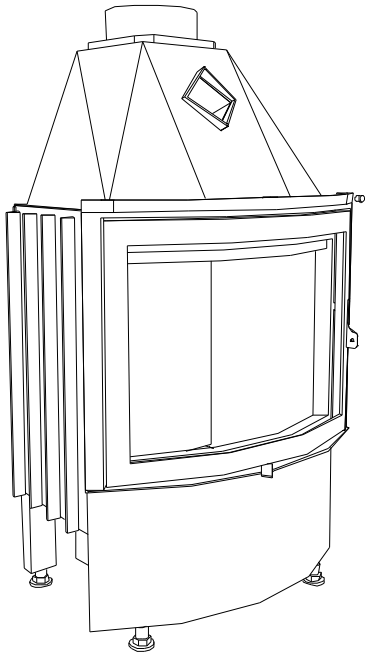

- Technical Data:

Type:	MÝTO R550 670/500	
Average heat output:		9 kW
Operating heat power:		
Flue gas mass flow:		20 g/s
Flue gas temperature:		280 °C
Emission of CO to 13 % O2:		0,10%
Pressure required:		12 Pa
Weight:	M R550 670/500	160 kg
	M R550 VD 740/480	

Technical Sheet

MÝTO R550 780/560

Range 780

- Basic Model**: MÝTO R550 780/560**
- Convection Casing (DP):*MÝTO R550 780/560-DP*

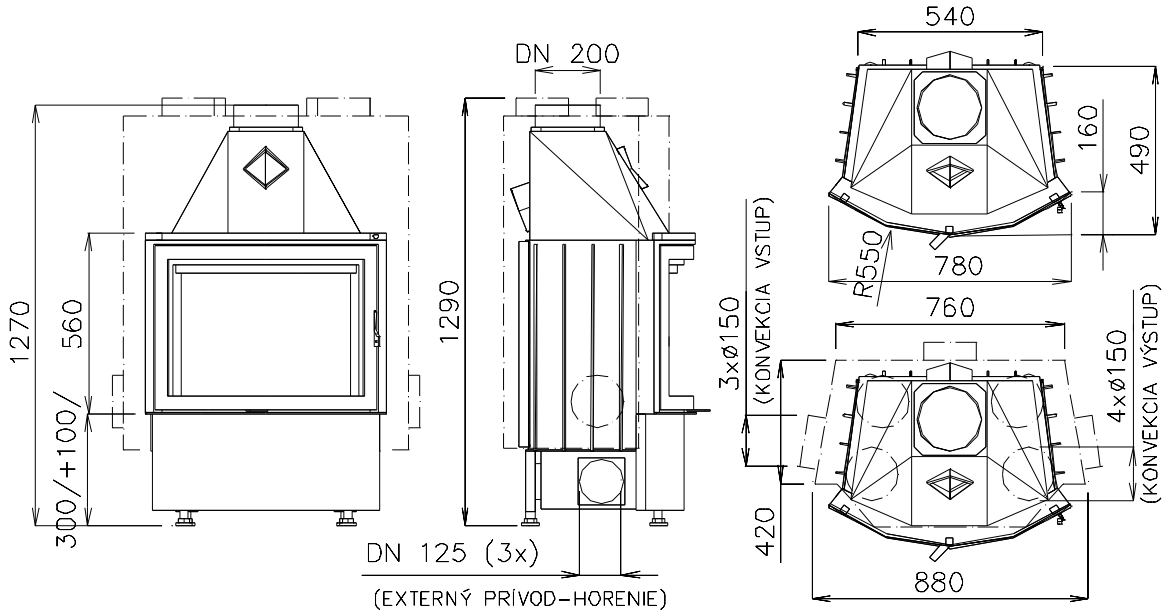

- Vertical Opening Door (VD): *MÝTO R550 VD 850/540*

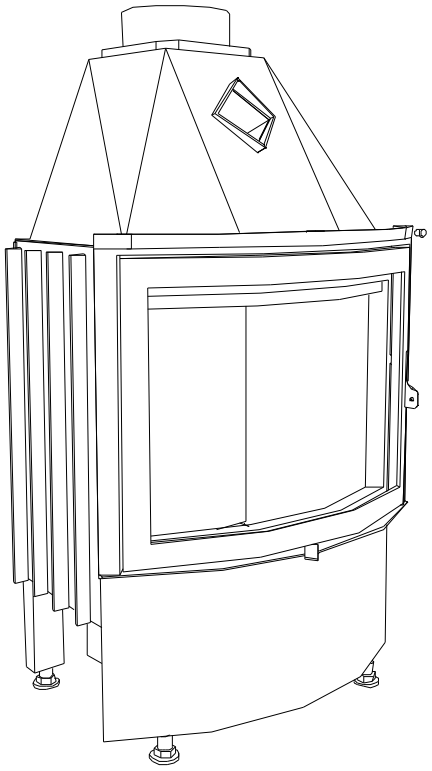

- Technical Data:

Type:	MÝTO R550 780/560
Average heat output:	10 kW
Operating heat powe	3-12,5 kW
Flue gas mass flow:	20 g/s
Flue gas temperature:	320 °C
Emission of CO to 13 % O2:	0,10%
Pressure required:	12 Pa
Weight:	M R550 780/560 185kg
	M R550 VD 850/540

Technical Sheet

MÝTO R900 670/500

Range 670

- Basic Model: **MÝTO R900 670/500**
- Convection Casing (DP):*MÝTO R900 670/500-DP*

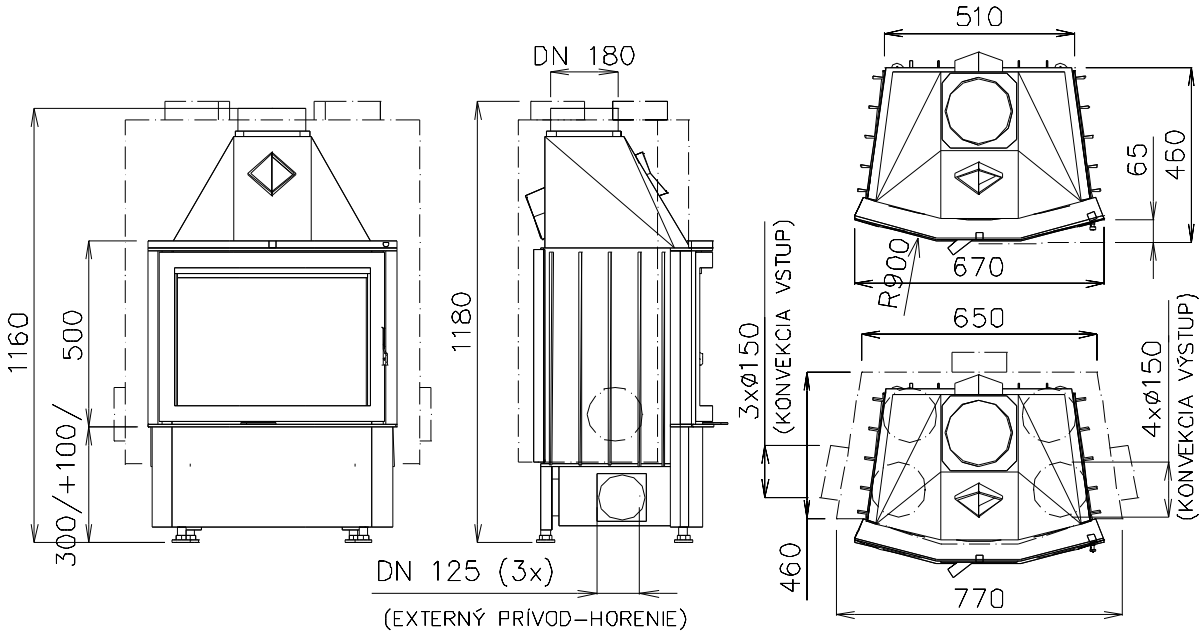

- Vertical Opening Door (VD): *MÝTO R900 VD 740/480*

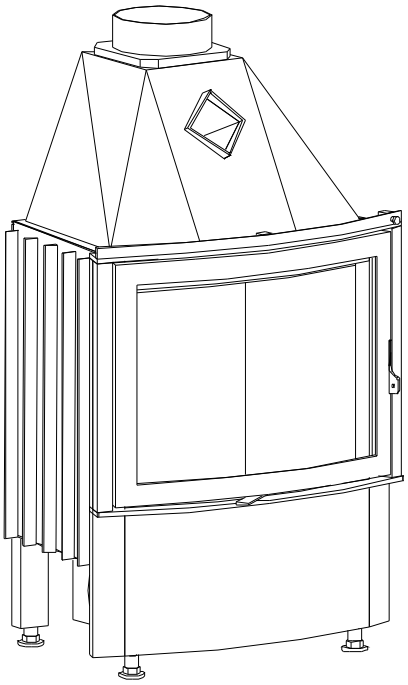

- Technical Data:

Type:	MÝTO R900 670/500	
Average heat output:		9 kW
Operating heat power:		3-11 kW
Flue gas mass flow:		20 g/s
Flue gas temperature:		280 ^{o}C
Emission of CO to 13 % O2:		0,10%
Pressure required:		12 Pa
Weight:	M R900 670/500	170 kg
	M R900VD 740/480	

Technical Sheet

MÝTO R900 780/560

Range 780

- Basic Model: **MÝTO R900 780/560**
- Convection Casing (DP):*MÝTO R900 780/560-DP*

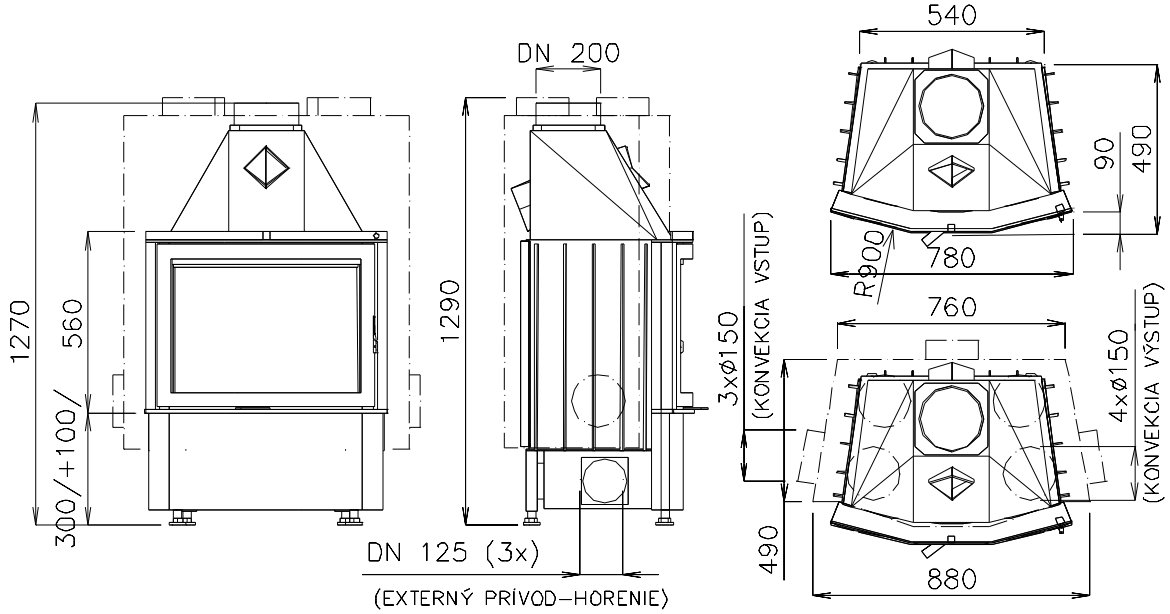

- Vertical Opening Door (VD): *MÝTO R900 VD 850/540*

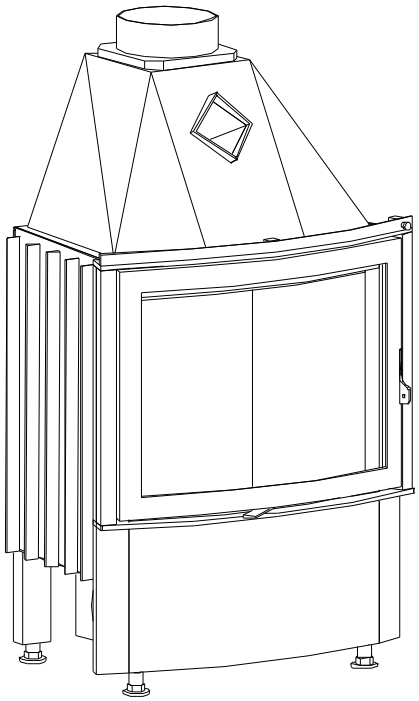

- Technical Data:

Type:	MÝTO R900 780/560	
Average heat output:		10 kW
Operating heat power:		3-12,5 kW
Flue gas mass flow:		20 g/s
Flue gas temperature:		320 °C
Emission of CO to 13 % O2:		0,10%
Pressure required:		12 Pa
Weight:	M R900 780/560	195 kg
	M R900 VD 850/540	

Technical Sheet

MÝTO R900 O 670/500

Range 670

- Basic Model**: MÝTO R900 O 670/500**
- Convection Casing (DP):*MÝTO R900 O 670/500-DP*

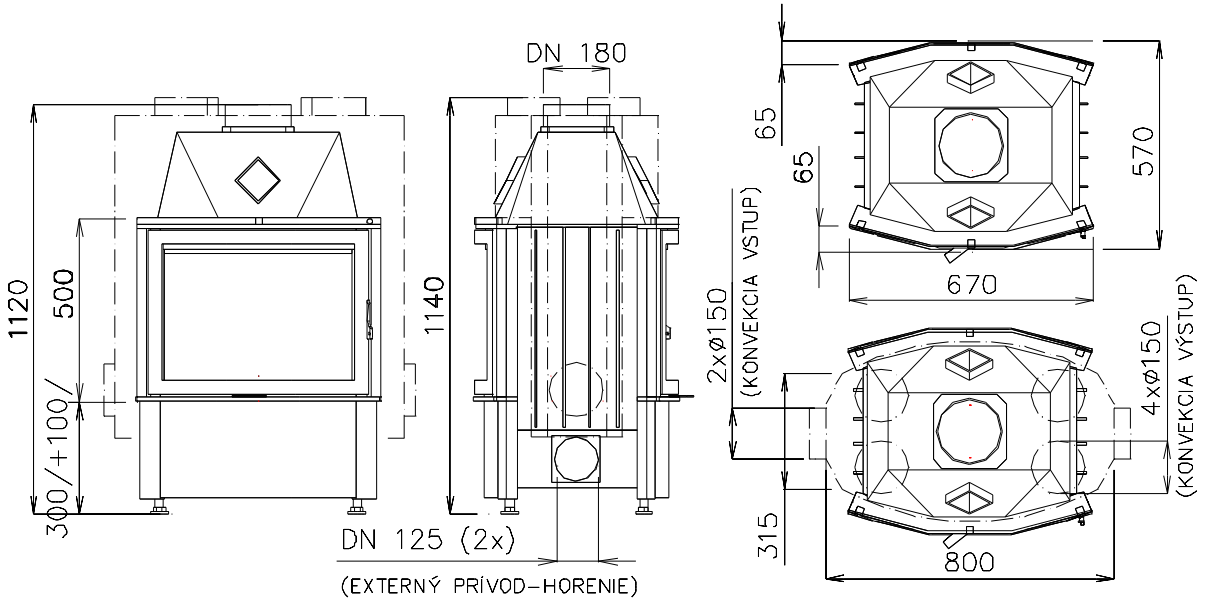

- Vertical Opening Door (VD): *MÝTO R900 VD 740/480*

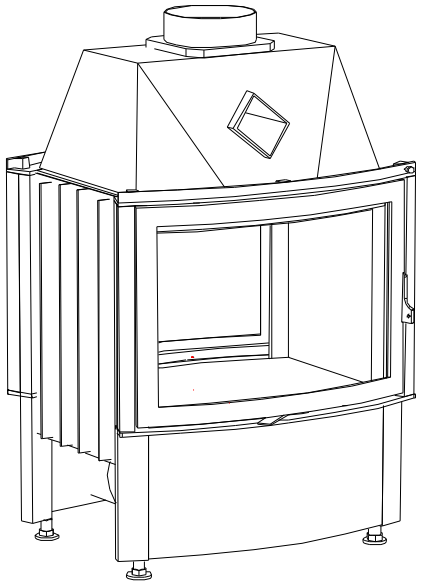

- Technical Data:

Type:	MÝTO R900 O 670/500	
Average heat output:		9 kW
Operating heat power:		3-11 kW
Flue gas mass flow:		20 g/s
Flue gas temperature:		280 ^{o}C
Emission of CO to 13 % O2:		0,10%
Pressure required:		12 Pa
Weight:	M R900 O 670/500	205 kg
	M R900 0 VD 740/480	

Technical Sheet

MÝTO R900 O 780/560

Range 780

- Basic Model**: MÝTO R900 O 780/560**
- Convection Casing (DP):*MÝTO R900 O 780/560-DP*

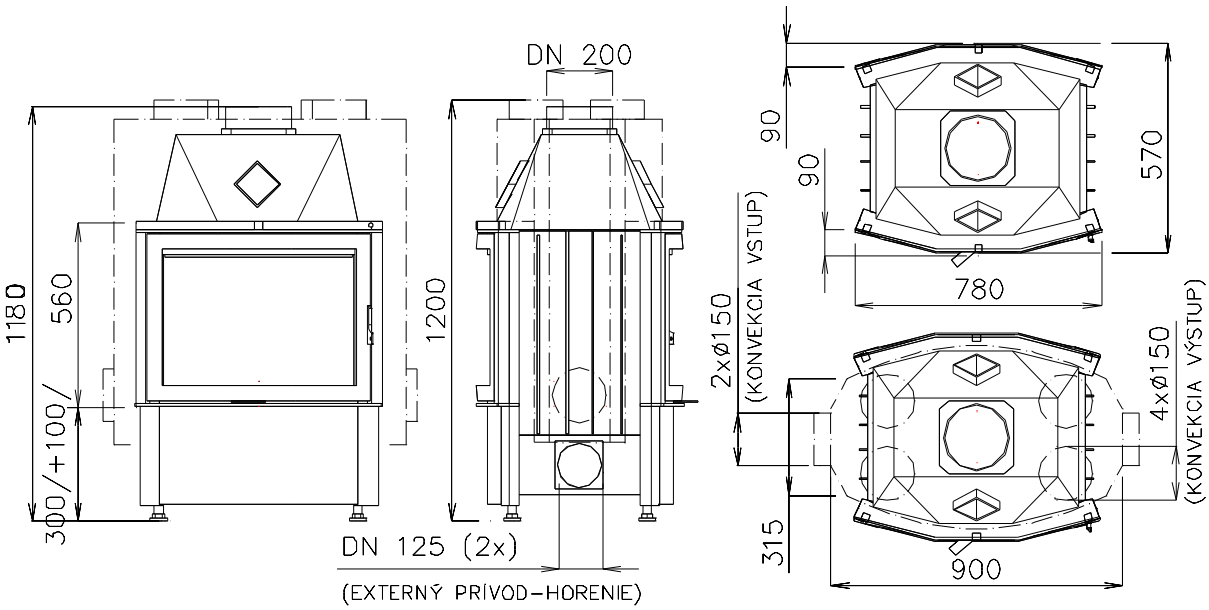

- Vertical Opening Door (VD): *MÝTO R900 VD 850/540*

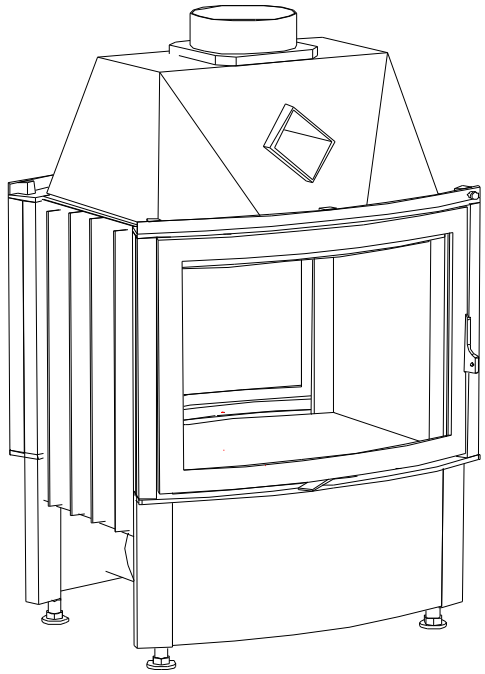

- Technical Data:

Type:	MÝTO R900 O 780/560
Average heat output:	10 kW
Operating heat power:	3-12,5 kW
Flue gas mass flow:	20 g/s
Flue gas temperature:	320 ^{o}C
Emission of CO to 13 % O2:	0,10%
Pressure required:	12 Pa
Weight: M R900 O 780/560	240 kg
M R900 O VD 850/540	

BYSTRÁ 440/440,560,660

- Basic Model: **BYSTRÁ 440/440,560,660**
- Convection Casing (DP):*BYSTRÁ 440/440,560,660-DP*

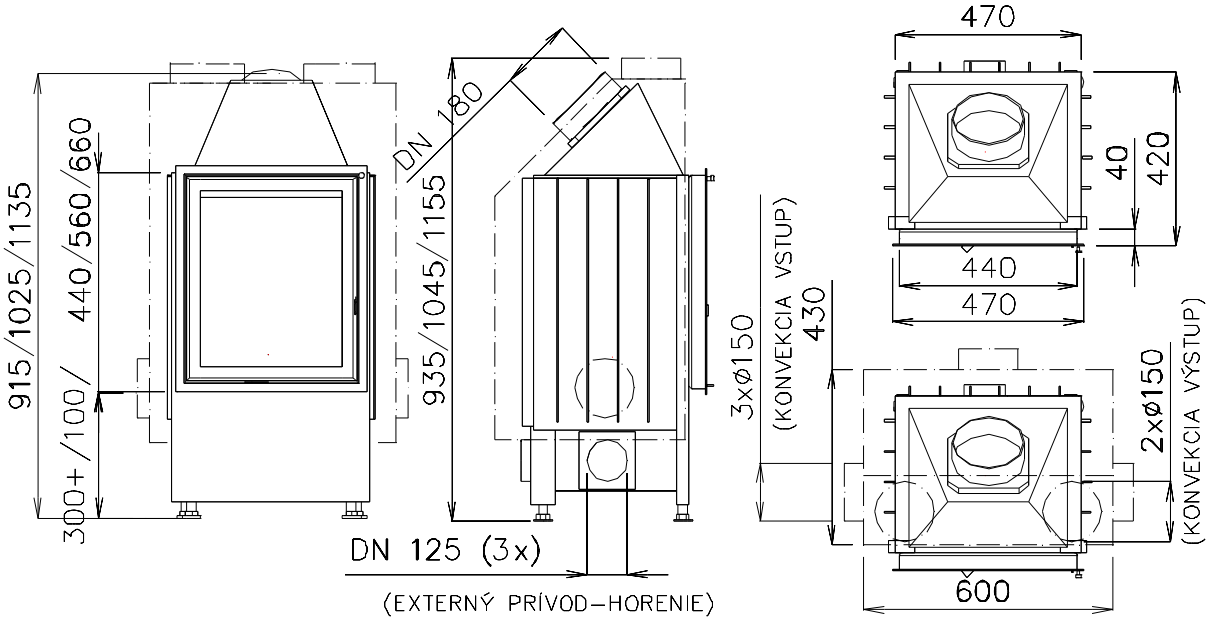

+

- Vertical Opening Door (VD): *BYSTRÁ VD 510/420,540,640*

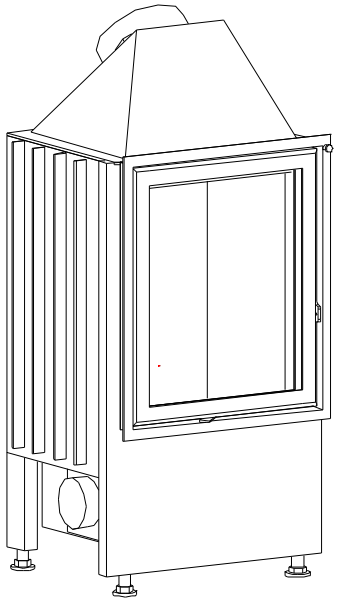

- Technical Data:

Type:	BYSTRÁ 440/440,560,6
Average heat output:	5 kW
Operating heat power:	1,5-6,5 kW
Flue gas mass flow:	5 g/s
Flue gas temperature:	205 ^{o}C
Emission of CO to 13 % O2	0,15%
Pressure required:	12 Pa
Weight:B 440/440/560/660	135/140/145kg
B VD 510/420/540/640	

BYSTRÁ 550/560,660

- Basic Model: **BYSTRÁ 550/560,660**
- Convection Casing (DP):*BYSTRÁ 550/560,660-DP*

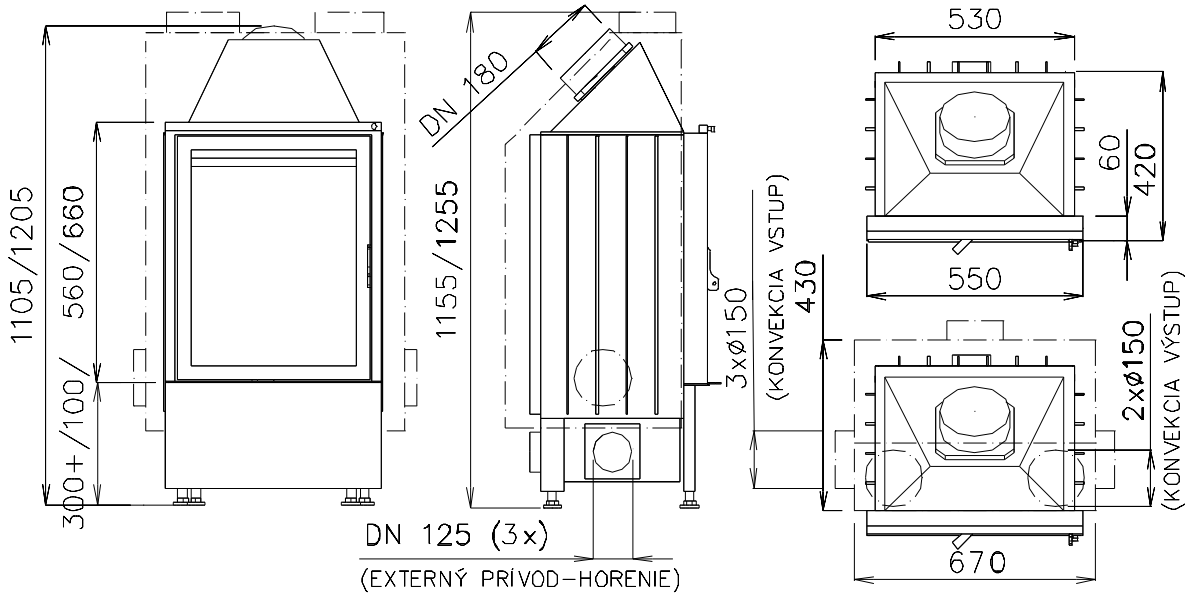

- Vertical Opening Door (VD): *BYSTRÁ VD 620/540,640*

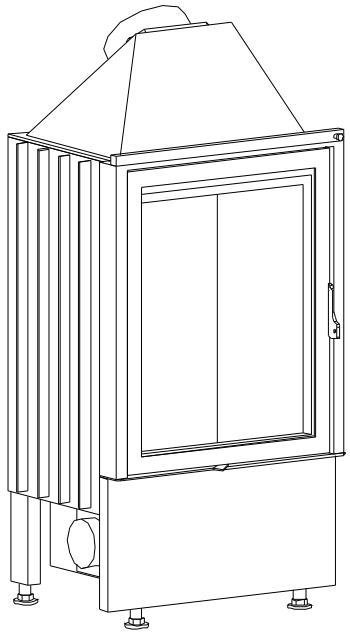

- Technical Data:

Type:	BYSTRÁ 550/560,660
Average heat output:	8 kW
Operating heat power:	2-10 kW
Flue gas mass flow:	12 g/s
Flue gas temperature:	240 °C
Emission of CO to 13 % O2:	0,12%
Pressure required:	12 Pa
Weight:	B 550/560/66165/180 kg
	B VD 620/540/640

Technical Sheet

BYSTRÁ 550/780

Range 550

- Basic Model: **BYSTRÁ 550/780**
- Convection Casing (DP): *BYSTRÁ 550/780-DP*

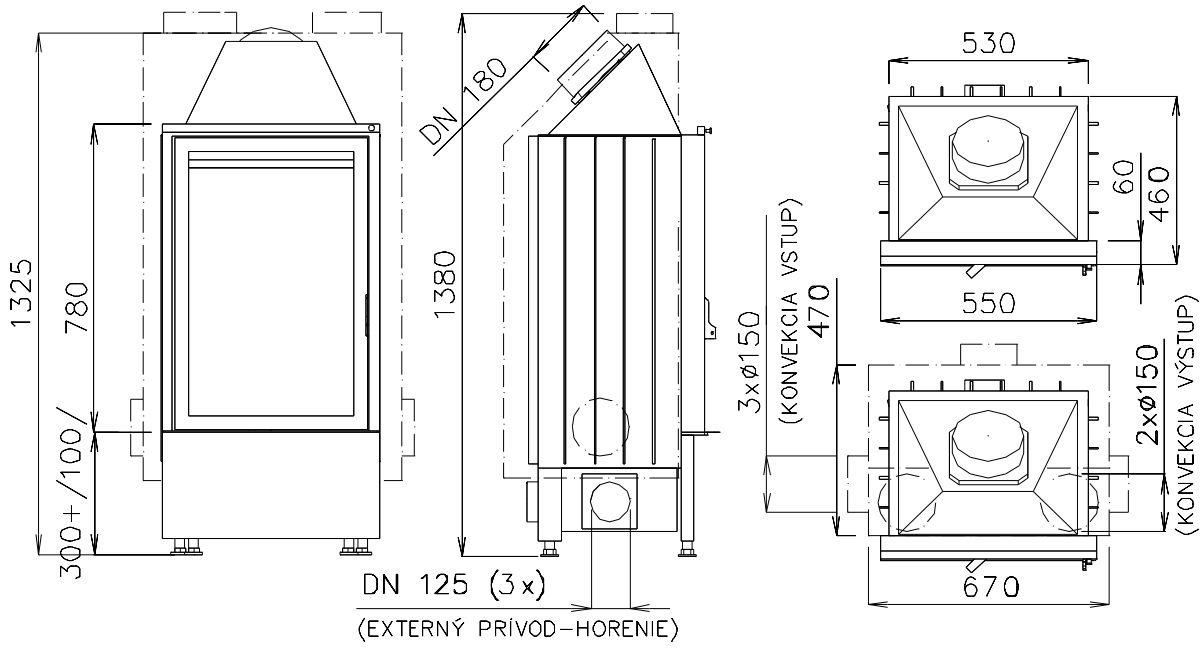

- Vertical Opening Door (VD): *BYSTRÁ VD 620/760*

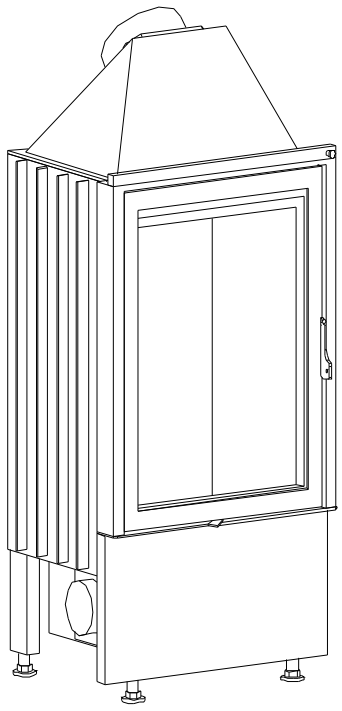

- Technical Data:

Type:		BYSTRÁ 550/780
Average heat output		8 kW
Operating heat power:		2-10 kW
Flue gas mass flow:		12 g/s
Flue gas temperature:		240 ^{o}C
Emission of CO to 13 % O2:		0,12%
Pressure required:		12 Pa
Weight:	B 550/780	205kg
	B VD 620/760	

Technical Sheet

BYSTRÁ 600/780

Range 600

- Basic Model: **BYSTRÁ 600/780**
- Convection Casing (DP): *BYSTRÁ 600/780-DP*

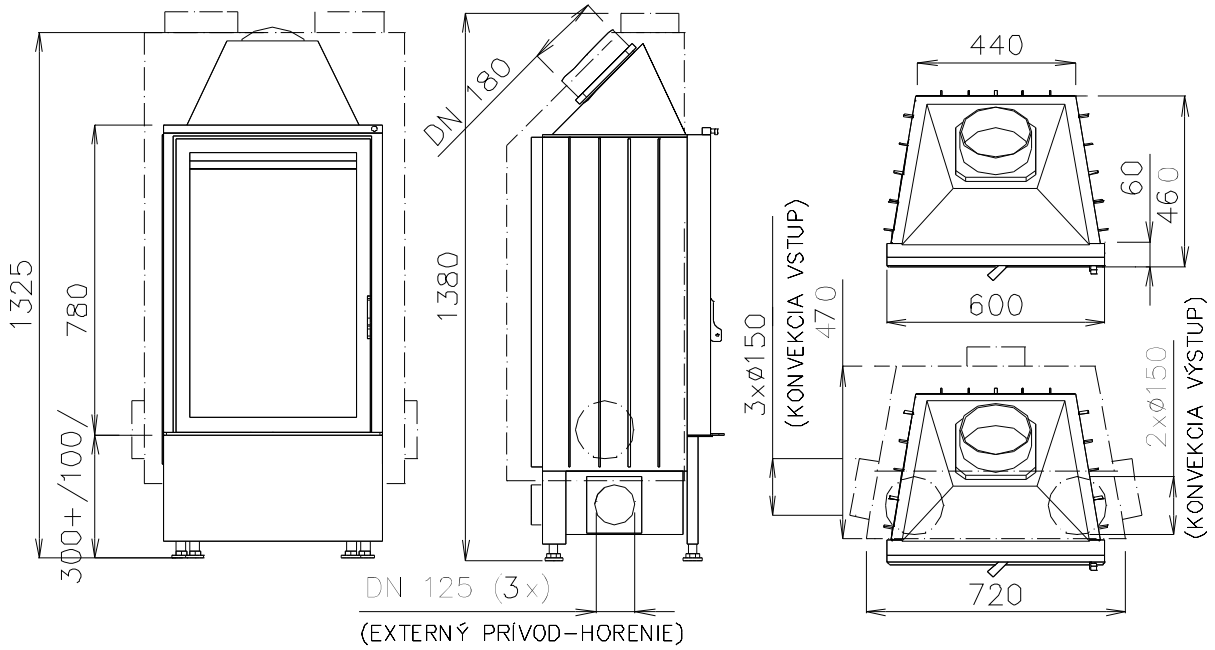

- Vertical Opening Door (VD*): BYSTRÁ VD 670/760*

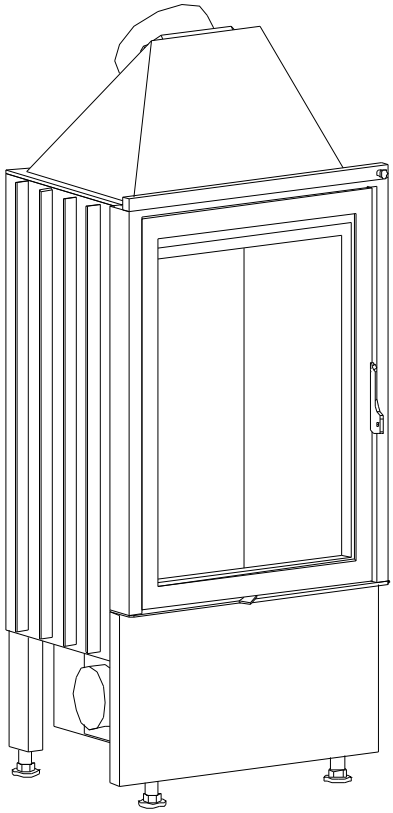

- Technical Data:

Type:		BYSTRÁ 600/780
Average heat output:		8,5 kW
Operating heat power:		2,5-10,5 kW
Flue gas mass flow:		15 g/s
Flue gas temperature:		250 ^{o}C
Emission of CO to 13 % O2:		0,12%
Pressure required:		12 Pa
Weight:	B 600/780	230 kg
	B VD 670/760	

Technical Sheet

BYSTRÁ PRIZMA 550/560,660

Range 550

- Basic Model**: BYSTRÁ PRIZMA 550/560,660**
- Convection Casing (DP): *BYSTRÁ PRIZMA 550/560,660-DP*

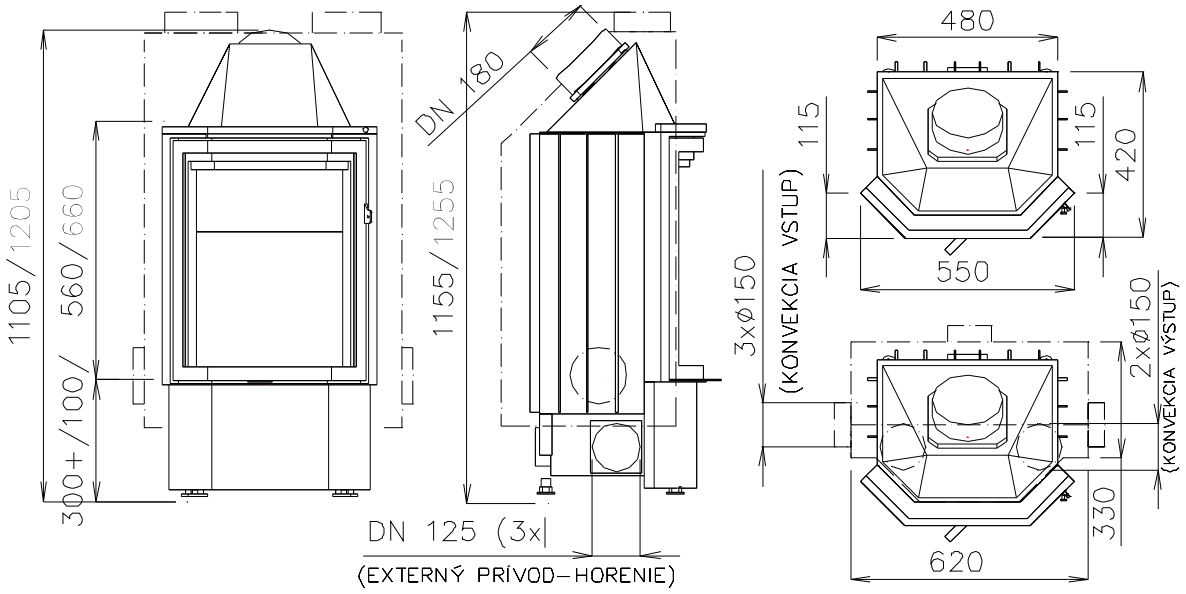

- Vertical Opening Door (VD): *BYSTRÁ PRIZMA VD 620/,540,640*

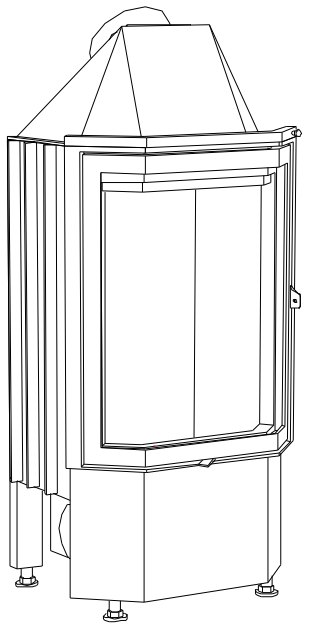

- Technical Data:

Type:	BYSTRÁ PRIZMA 550/560,660
Average heat output:	8 kW
Operating heat power:	2-10 kW
Flue gas mass flow:	12 g/s
Flue gas temperature:	240 ^{o}C
Emission of CO to 13 % O2:	0,12%
Pressure required:	12 Pa
Weight: B PRIZMA 550/560/660	150/160 kg
B PRIZMA VD 620/540/640	

Technical Sheet

BYSTRÁ POLAR R 300 550/560,660

Range 550

- Basic Model: **BYSTRÁ POLAR R 300 550/560,660**
- Convection Casing (DP): *BYSTRÁ POLAR R 300 550/560,660-DP*

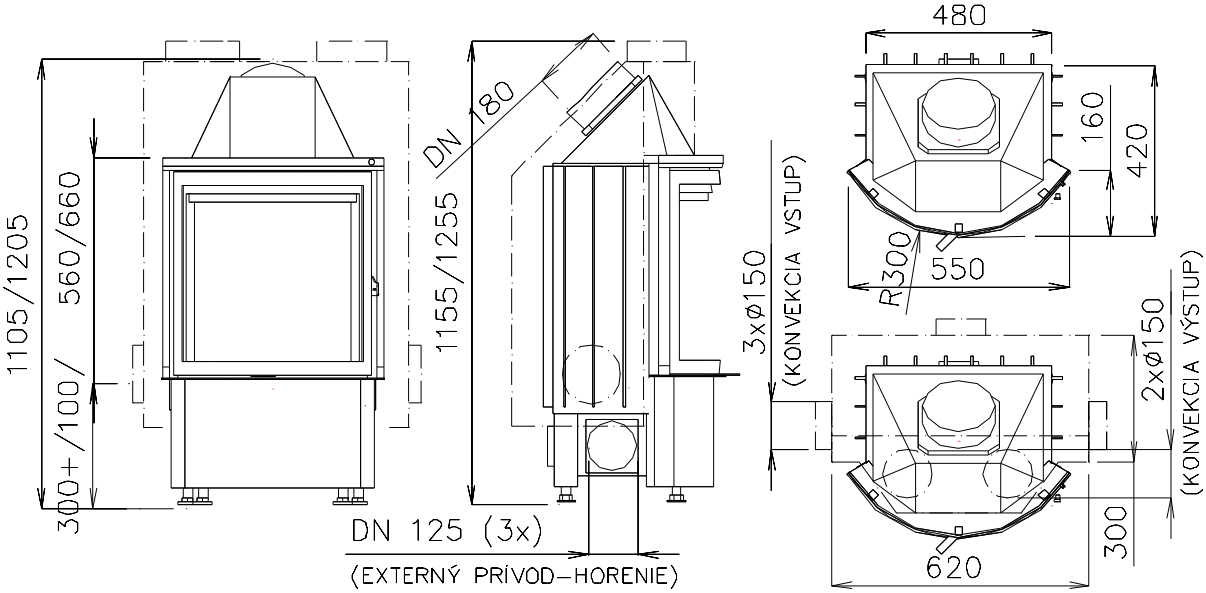

- Vertical Opening Door (VD): *BYSTRÁ POLAR R 300 VD 620/,540,640*

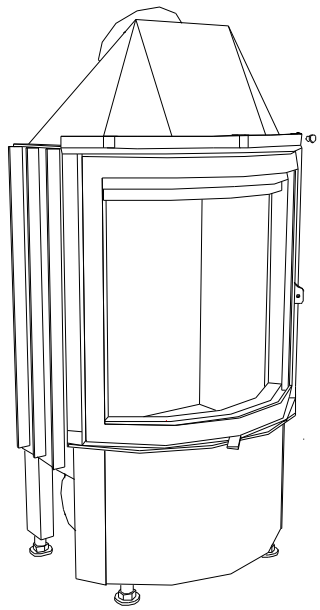

- Technical Data:

Type:BYSTRÁ POLAR R 300 550/560,660

Average heat output:	8 kW
Operating heat power:	2-10 kW
Flue gas mass flow:	12 g/s
Flue gas temperature:	240 °C
Emission of CO to 13 % O2:	0,12%
Pressure required:	12 Pa
Weight:B POLAR R 300 550/560/660	140/150 kg
B POLAR R 300 VD 620/540/64	

Technical Sheet

BYSTRÁ POLAR R 550 550/560,660

Range 550

- Basic Model: **BYSTRÁ POLAR R 550 550/560,660**
- Convection Casing (DP): *BYSTRÁ POLAR R 550 550/560,660-DP*

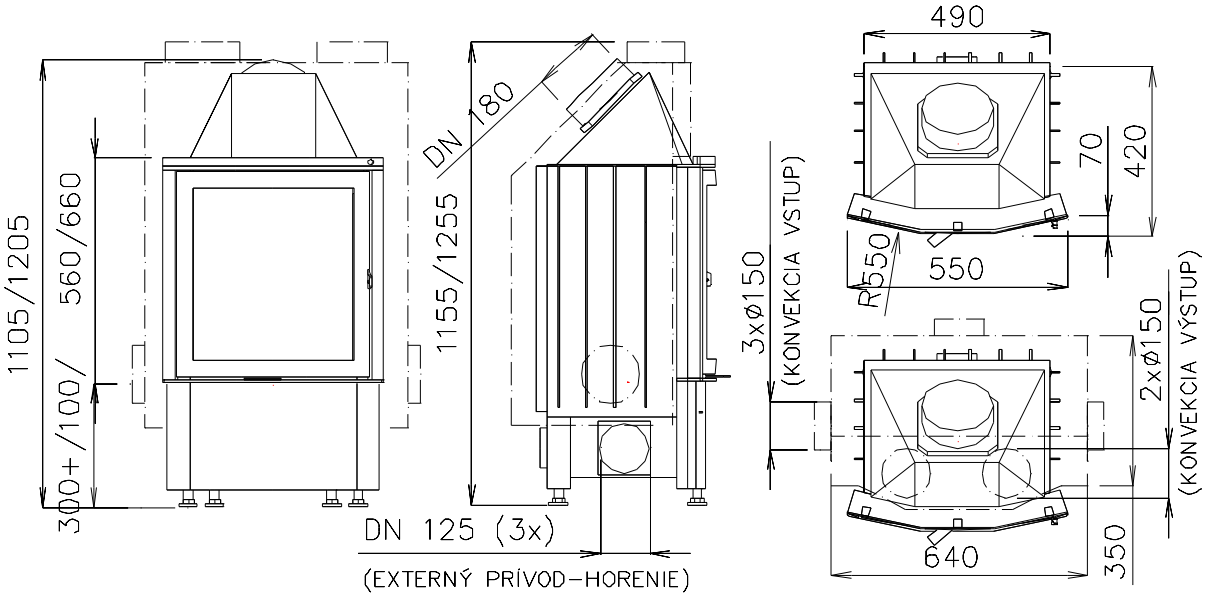

- Vertical Opening Door (VD): *BYSTRÁ POLAR R 550 VD 620/540,640*

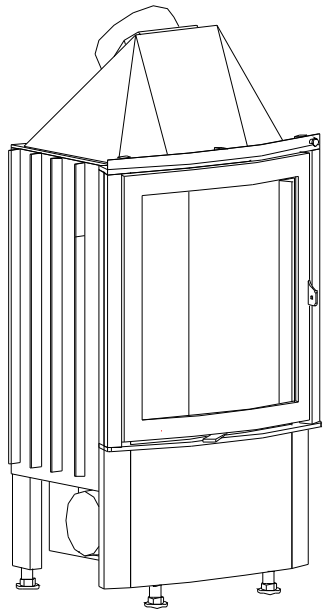

- Technical Data:

Type:	BYSTRÁ POLAR R 550 550/560,660
Average heat output:	8 kW
Operating heat power:	2-10 kW
Flue gas mass flow:	12 g/s
Flue gas temperature:	240 °C
Emission of CO to 13 % O2:	0,12%
Pressure required:	12 Pa
Weight: B POLAR R 550 550/560/660	150/165 kg
B POLAR R 550 VD 620/540/640	

Technical Sheet

BYSTRÁ POLAR R 900 550/560,660

Range 550

- Basic Model: **BYSTRÁ POLAR R 900 550/560,660**
- Convection Casing (DP): *BYSTRÁ POLAR R 900 550/560,660-DP*

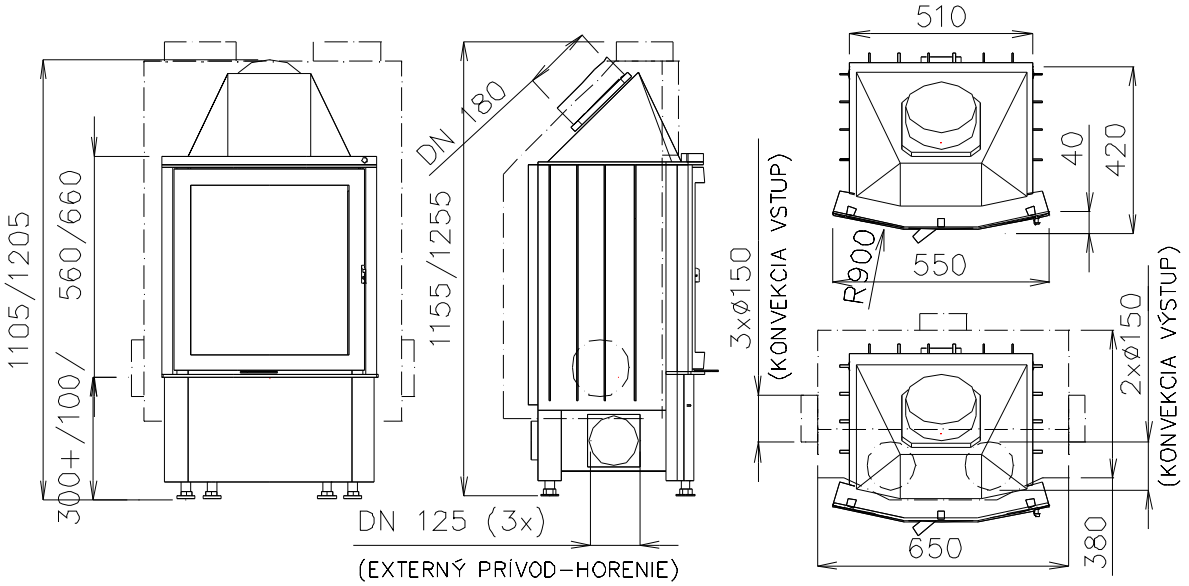

- Vertical Opening Door (VD): *BYSTRÁ POLAR R 900 VD 620/,540,640*

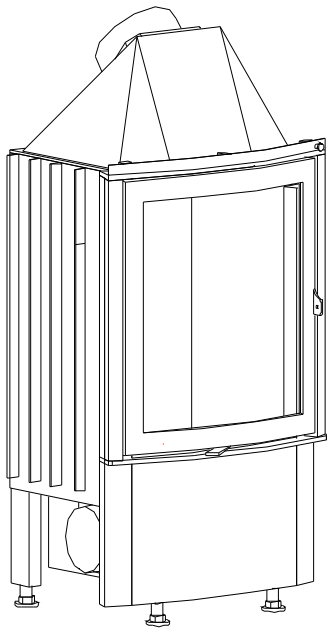

- Technical Data:

Type:	BYSTRÁ POLAR R 900 550/560,660
Average heat output:	8 kW
Operating heat power:	2-10 kW
Flue gas mass flow:	12 g/s
Flue gas temperature:	240 °C
Emission of CO to 13 % O2:	0,12%
Pressure required:	12 Pa
Weight: B POLAR R 900 550/560/660	160/175 kg
B POLAR R 900 VD 620/540/640	

● Basic Model**: XXXXXXXX + TV L/P**

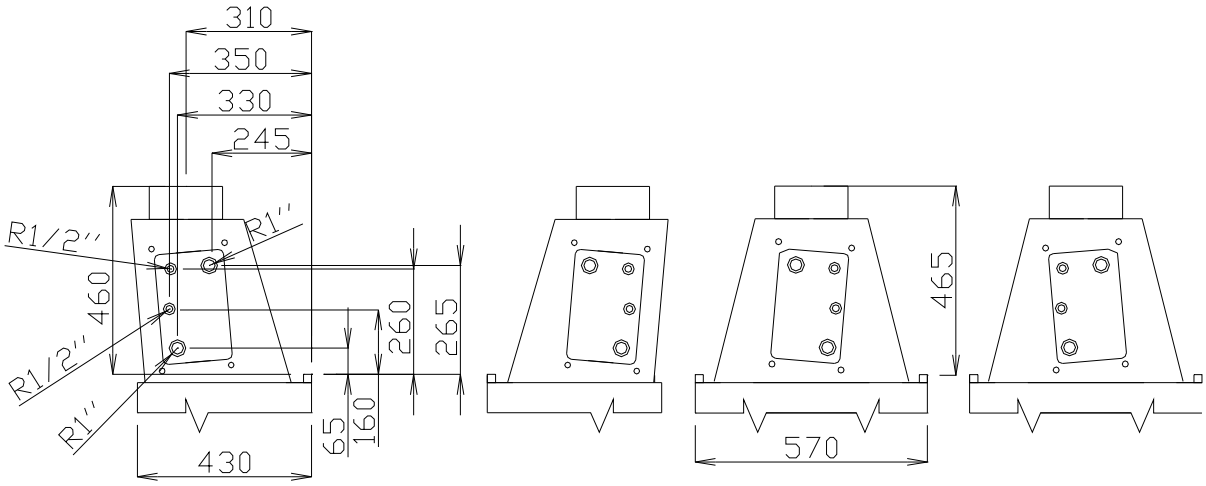

● Cooler*: XXXXXXXX + TV L/P (left / right) with cooler*

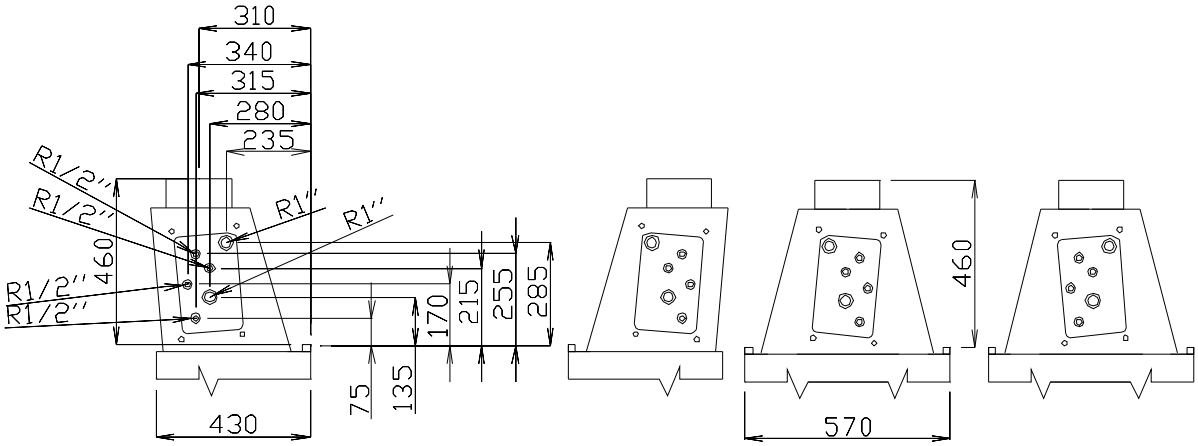

● Technical Data:

Type: XXXXXXXX + TV L/P (left / right)

Range:	550	600	670	780
Water volume:	8 l	8l	11,5l	14l
Average heat output – without cooler:	5 kW	5 kW	6 kW	6 kW
Average heat output – with cooler:	4 kW	4 kW	5 kW	5 kW
Weight of heat exchanger	30 kg	35 kg	40 kg	45 kg

*XXXXXXXX - Basic Model

Technical Sheet

EXTERNAL ASHTRAY

Range 550, 600,670,780

● Basic Model: **XXXXXXXX VP**

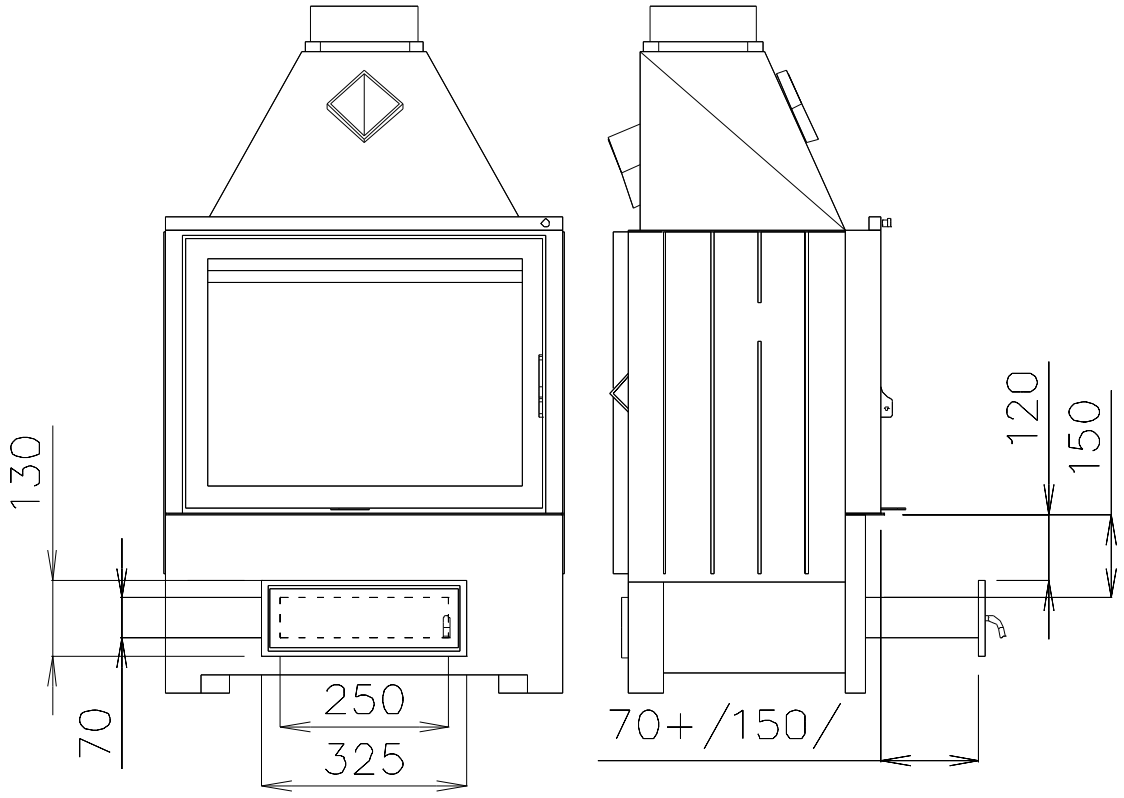

● Technical Data:
Type: XXXXXXXX VP
Weight : 8 kg

*XXXXXXXX - Basic Model

EXTERNAL ASHTRAY

- Basic Model: **XXXXXXXX VP**

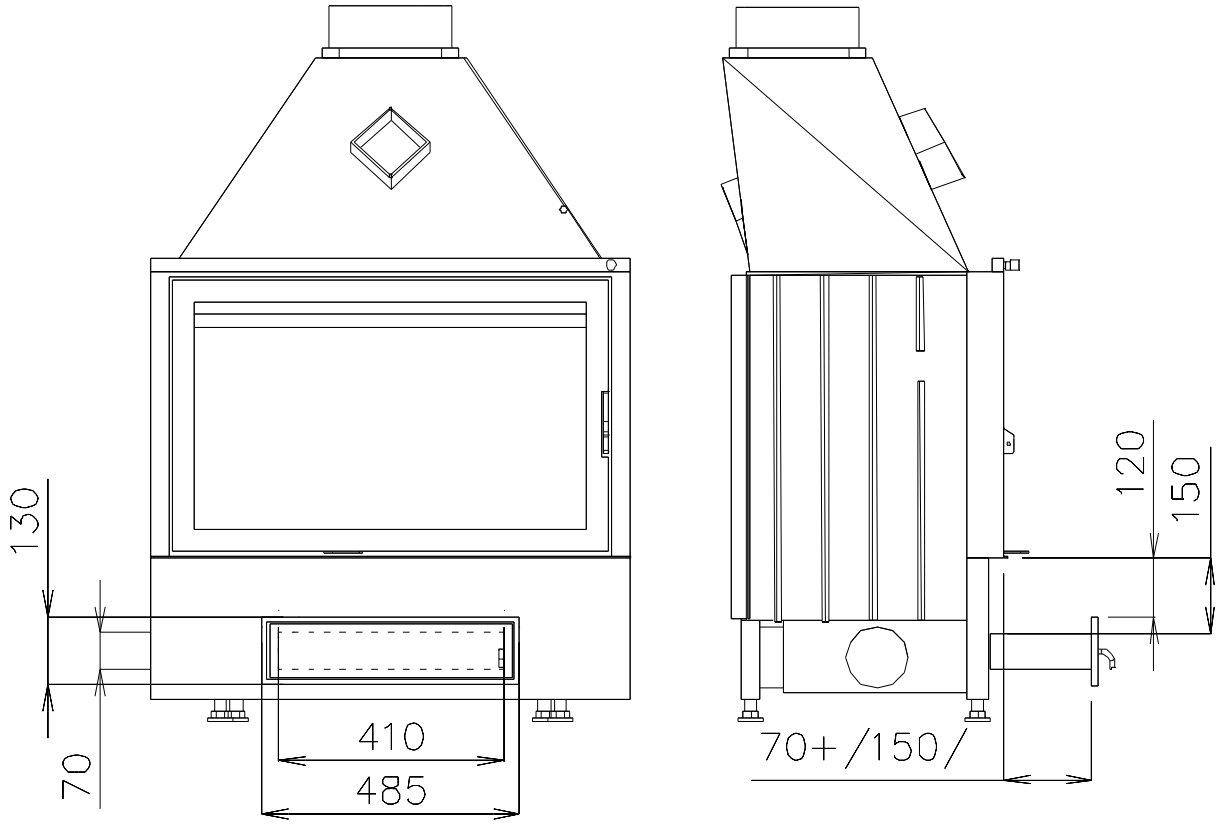

- Technical Data:
  Type: XXXXXXXX VP
  Weight: 12 kg

*XXXXXXXX - Basic Model

Technical Sheet

LOWER HEARTH Range 550,600,670,780,900,1000

● Basic Model: **XXXXXXXX ZO**

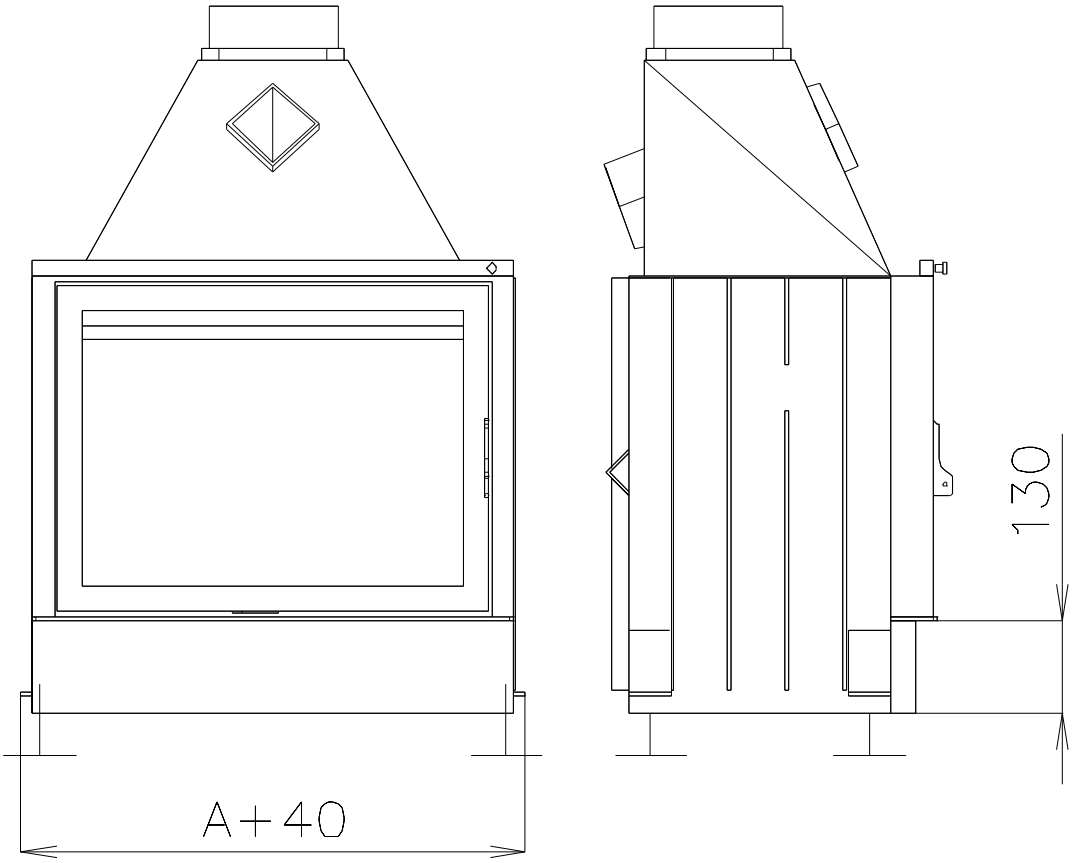

● Technical Data:
Type: XXXXXXXX ZO
Nin – grate burning.

*XXXXXXXX - Basic Model

Technical Sheet

BURNING STABILIZATOR **STABIL** Range 550,600,670,780,900,1000

● Basic Model: **XXXXXXXX STABIL**

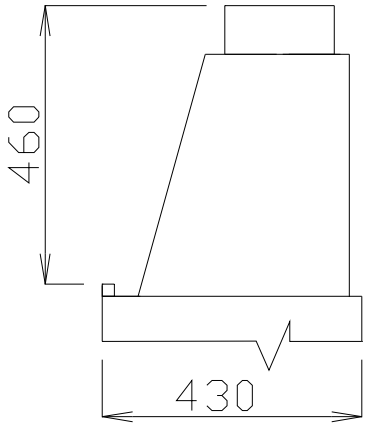

● Technical Data:
Type: XXXXXXXX STABIL

Average heat output: relating to the range, output of basic model + 20%

*XXXXXXXX - Basic Model , CHOPOK only

Technical Sheet

HEAT EXCHANGER **NADSTAVBA** Range 180,200

● Basic Model: **NADSTAVA 180,200**

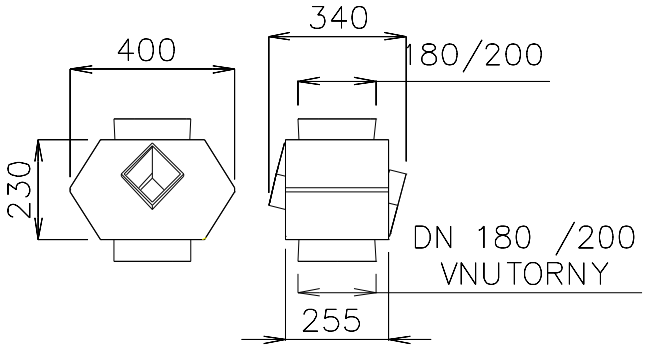

● Technical Data:
Type: NADSTAVBA 180/200
Weight: 18 kg

Technical Sheet

HEAT EXCHANGER **VERTIKAL** Range 180,200

● Basic Model: **VERTIKAL 50,75,100**

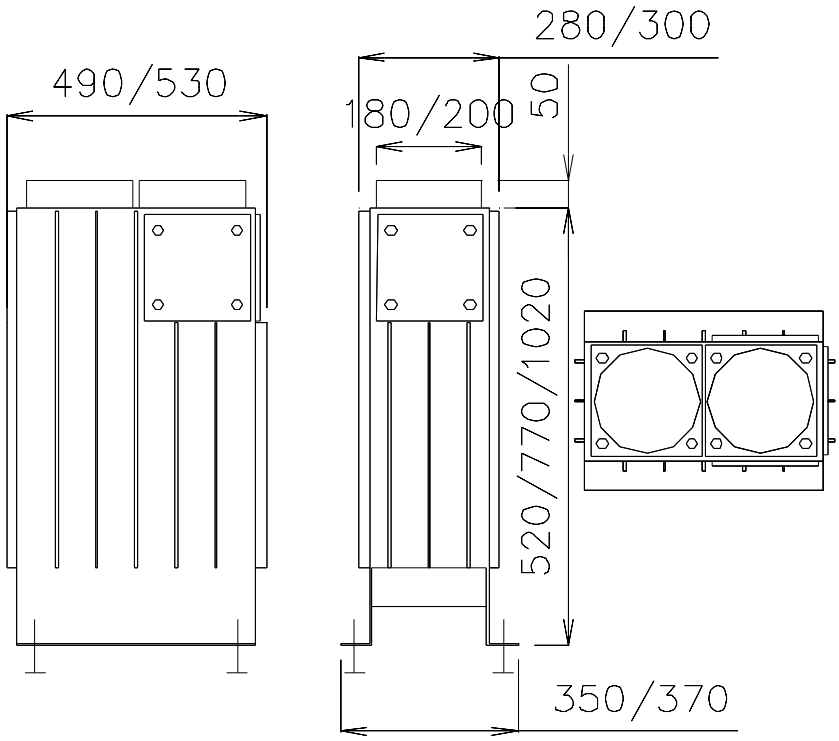

● Technical Data:
Type: VERTIKA 50,75,100
Weight : 40/56/72 kg

Updated: